金輪牌工業用縫紉機

Golden wheel industrial sewing machine

零件分解圖

PARTS BOOK

NO:2450NAV00

MODEL: CS-2450N-A/V系列（暫定版）

(2451,2452,2460,2461,2462)

GOLDEN WHEEL

啓翔股份有限公司
CHEE SIANG INDUSTRIAL CO.,LTD.

MODEL:CS-2450N-A/V

	索 引	INDEX	PAGE
A、	本體關係 (一)	FRAME & MISCELLANEOUS COVER COMPONENTS	2-3
B、	本體關係(二)	FRAME & MISCELLANEOUS COVER COMPONENTS	4-5
C、	本體關係(三)	FRAME & MISCELLANEOUS COVER COMPONENTS	6-7
D、	上軸、豎軸關係	MAIN SHAFT & UPRIGHT SHAFT COMPONENTS	8-9
E、	釜軸關係	HOOK SHAFT COMPONENTS	10-11
F、	針棒、天秤關係	NEEDLE BAR & TREAD TAKE-UP LEVER COMPONEN'	12-13
G、	送料關係(一)	FEED MECHANISM COMPONENTS	14-15
H、	送料關係(二)	FEED MECHANISM COMPONENTS	16-17
I、	押脚關係(一)	PRESSER BAR & KNEE LIFTER COMPONENTS	18-19
J、	押脚關係(二)	PRESSER BAR & KNEE LIFTER COMPONENTS	20-21
K、	押脚關係(三)	PRESSER BAR & KNEE LIFTER COMPONENTS	22-23
L、	油潤滑關係	OIL LUBRICATION COMPONENTS	24-25
M、	皮带蓋關係	BELT COVER COMPONENTS	26-27
N、	附件	ACCESSORIES	28-29

GOLDEN WHEEL

A. CS-2450N-A/V 本體關係 (一) FRAME & MISCELLANEOUS COVER COMPONENTS

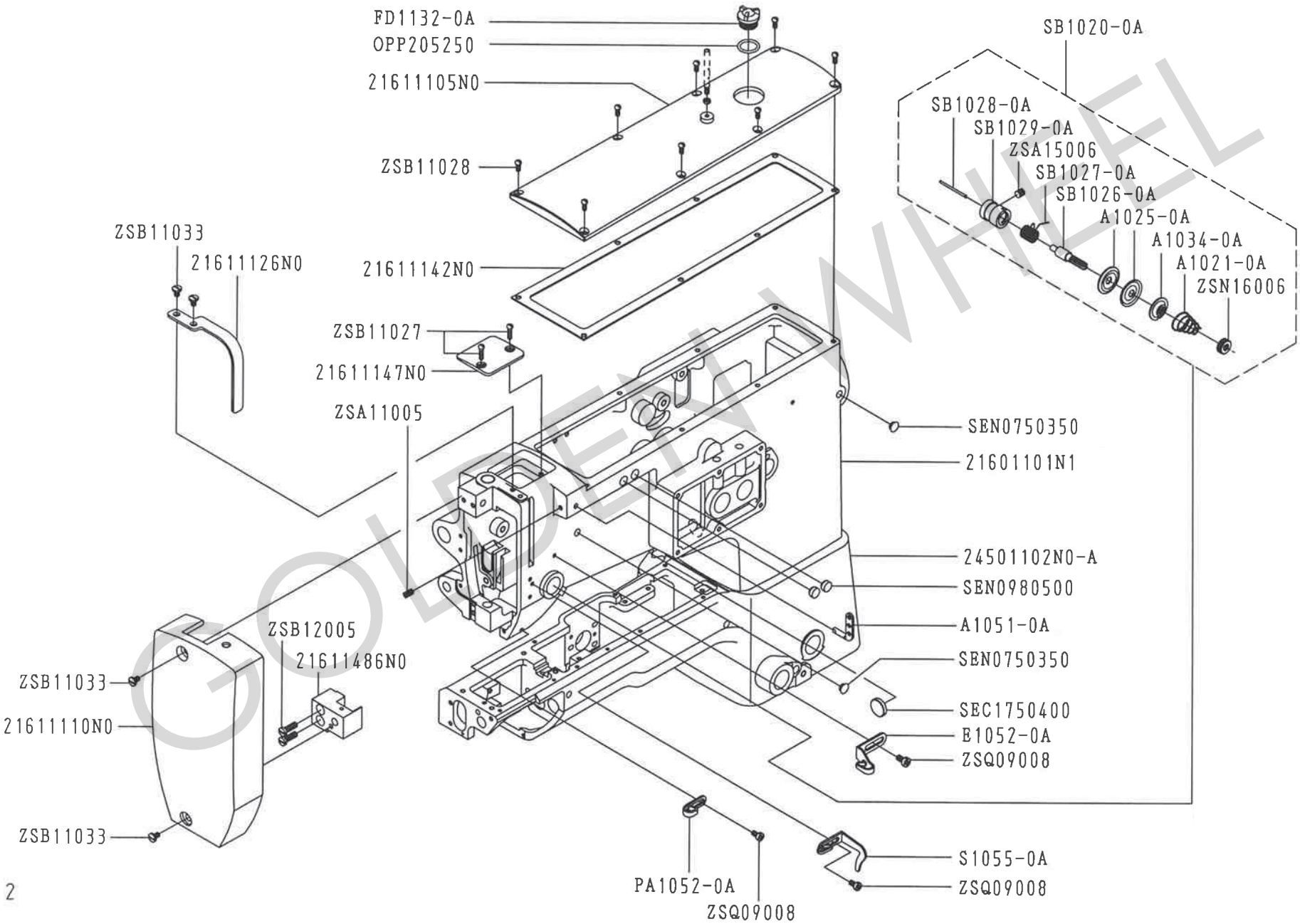

GOLDEN WHEEL

A. CS-2450N-A/V 本體關係(一) FRAME & MISCELLANEOUS COVER COMPONENTS

零件號碼 Part No.	零件名稱	Name of Part	件數 Q'TY 2450N-A
21601101N1	車頭	ARM	1
21611105N0	上蓋	TOP COVER	1
21611110N0	面板	FACE PLATE	1
21611126N0	天秤蓋	THREAD TAKE-UP LEVER COVER	1
21611142N0	油封	PACKING	1
21611147N0	油槽蓋	OIL TANK COVER	1
21611486N0	擋塊	BLOCK	1
24501102N0-A	底座	BED	1
A1021-0A	調整彈簧	TENSION SPRING	1
A1025-0A	壓線盤	TENSION DISK	2
A1034-0A	線調整壓盤	TENSION RELEASE WASHER	1
A1051-0A	三孔線掛	THREE HOLE THREAD EYELET PIN	1
E1052-0A	線掛	THREAD GUIDE	1
FD1132-0A	油窓	OIL SIGHT WINDOW	1
PA1052-0A	線掛	ARM THREAD GUIDE	1
S1055-0A	線掛	TENSION POST THREAD GUIDE	1
SB1020-0A	壓線調整組	THREAD TENSION SET	1
SB1026-0A	調整螺絲棒	TENSION POST	1
SB1027-0A	吊線彈簧	TAKE UP SPRING	1
SB1028-0A	鬆線銷	TENSION RELEASE PIN	1
SB1029-0A	彈簧座	TENSION POST ROCKET	1

零件號碼 Part No.	零件名稱	Name of Part	件數 Q'TY 2450N-A
OPP205250	O形環	O-RINGS	1
SEC1750400	油蓋	RUBBER PLUG	1
SEN0750350	油蓋	RUBBER PLUG	2
SEN0980500	油蓋	RUBBER PLUG	2
ZSA11005	螺絲	SCREW (11/64-40×5.5)	1
ZSA15006	螺絲	SCREW (15/64-28×12)	1
ZSB11027	螺絲	SCREW (11/64-40×16)	2
ZSB11028	螺絲	SCREW (11/64-40×10)	8
ZSB11033	螺絲	SCREW (11/64-40×7)	4
ZSB12005	螺絲	SCREW (3/16-28×15)	2
ZSN16006	螺帽	NUT (1/4-40)	1
ZSQ09008	螺絲	SCREW (9/64-40×6)	3

GOLDEN WHEEL

B. CS-2450N-A/V 本體關係 (二) FRAME & MISCELLANEOUS COVER COMPONENTS

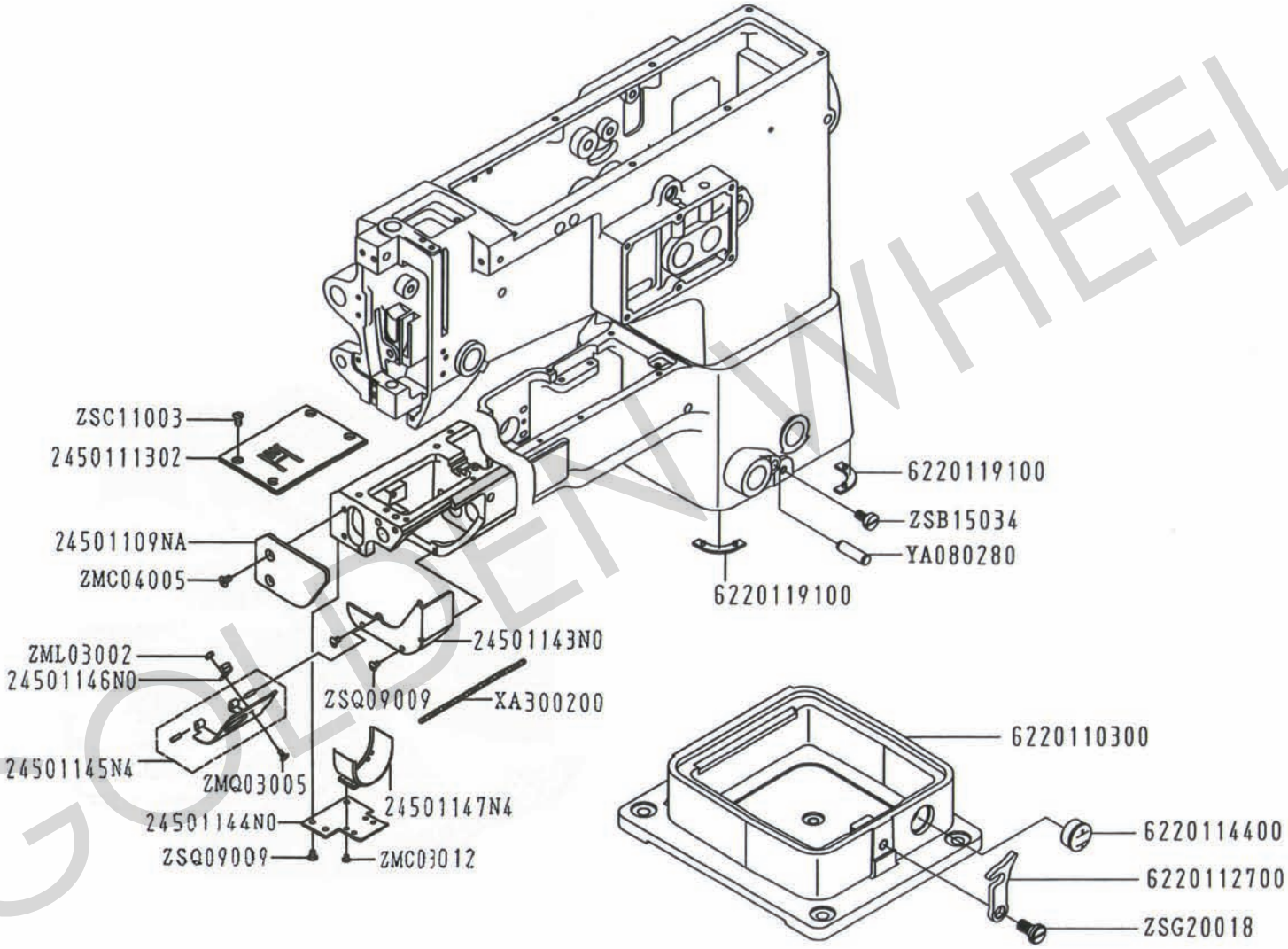

GOLDEN WHEEL

B. CS-2450N-A/V 本體關係(二) FRAME & MISCELLANEOUS COVER COMPONENTS

零件號碼 Part No.	零件名稱	Name of Part	件數 Q'TY 2450N	件數 Q'TY 2460N	零件號碼 Part No.	零件名稱	Name of Part	件數 Q'TY 2450N	件數 Q'TY 2460N
24501109NA	梭頭蓋	HOOK OVER	1	1	X300200	油線	OIL WICK	1	1
2450111302	針板	THROAT PLATE	1	1	YA080280	銷	STOPPER PIN	1	1
24501143N0	前蓋	COVER	1	1	ZMC03012	螺絲	SCREW	4	4
24501144N0	蓋板	PLATE	1	1	ZMC04005	螺絲	SCREW (M4-0.7x6.5)	3	3
24501145N4	蓋板組	PLATE ASM	1	1	ZML03002	螺絲	SCREW	1	1
24501146N0	壓板	PLATE	1	1	ZMQ03005	螺絲	SCREW	1	1
24501147N4	蓋板	PLATE	1	1	ZSB15034	螺絲	SCREW (15/64-28*12)	1	1
6220110300	底座盤	MACHINE BASE	1	1	ZSC11003	螺絲	SCREW	5	5
6220112700	底座銷勾	LATCH	1	1	ZSG20018	螺絲	HINGE SCREW	1	1
6220114400	油窓	OIL SIGHT WINDOW	1	1	ZSQ09009	螺絲	SCREW	5	5
6220119100	防振橡膠	VIBRATION PREVENTING RUBBER	2	2					

GOLDEN WHEEL

C. CS-2450N-A/V 本體關係 (三) FRAME & MISCELLANEOUS COVER COMPONENTS

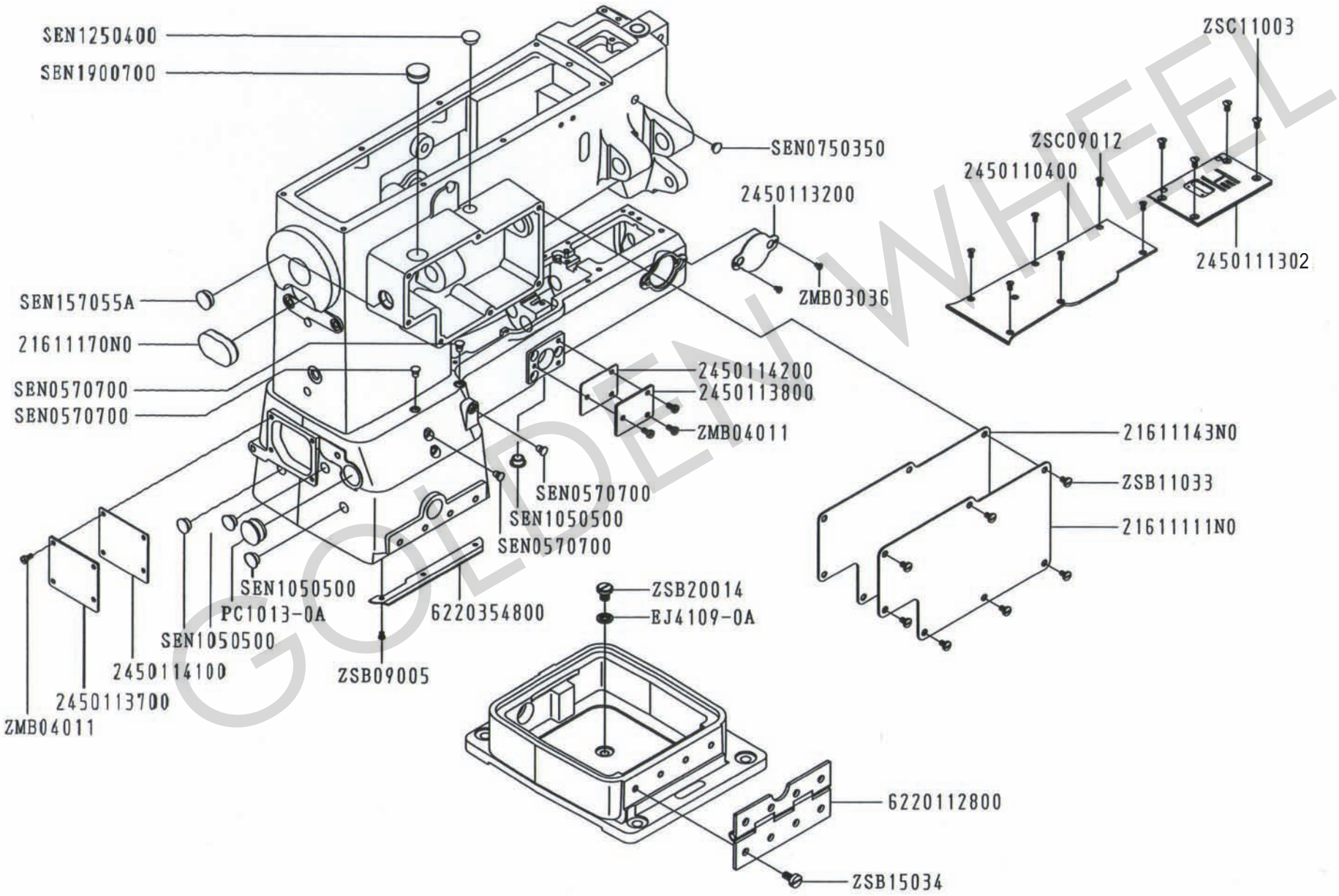

GOLDEN WHEEL

C. CS-2450N-A/V 本體關係(三) FRAME & MISCELLANEOUS COVER COMPONENTS

零件號碼 Part No.	零件名稱	Name of Part	件數 Q'TY 2450N	件數 Q'TY 2460N	零件號碼 Part No.	零件名稱	Name of Part	件數 Q'TY 2450N	件數 Q'TY 2460N
21611111N0	側板	ARM SIDE COVER	1	1	SEN0570700	油蓋	RUBBER PLUG	4	4
21611143N0	油封	PACKING	1	1	SEN0750350	油蓋	RUBBER PLUG	1	1
21611170N0	油蓋	RUBBER PLUG	1	1	SEN1050500	油蓋	RUBBER PLUG	4	4
2450110400	底座上蓋	UPPER COVER	1	1	SEN1250400	油蓋	RUBBER PLUG	1	1
2450111302	針板	THROAT PLATE	1	1	SEN157055A	油蓋	RUBBER PLUG	1	1
2450113200	底座側面蓋	SIDE COVER	1	1	SEN1900700	油蓋	RUBBER PLUG	1	1
2450113700	底座後蓋	REAR COVER	1	1	ZMB03036	螺絲	SCREW (M3-0.5x4)	2	2
2450113800	底座側面蓋	SIDE COVER	1	1	ZMB04011	螺絲	SCREW (M4-0.7x6)	7	7
2450114100	油封	PACKING	1	1	ZSB09005	螺絲	SCREW (SM9/64-40x5)	3	3
2450114200	油封	PACKING	1	1	ZSB11033	螺絲	SCREW (SM11/64-40x7)	7	7
6220112800	後鈕	HINGE	1	1	ZSB15034	螺絲	SCREW (SM15/64-28x12)	8	8
6220354800	油防板	OIL GUARD PLATE	1	1	ZSB20014	螺絲	SCREW (SM5/16-28x9.3)	1	1
EJ4109-0A	墊圈	WASHER	1	1	ZSC09012	螺絲	SCREW (SM9/64-40x7)	6	6
PC1013-0A	油蓋	RUBBER PLUG	1	1	ZSC11003	螺絲	SCREW (SM11/64-40x9)	4	4

GOLDEN WHEEL

D. CS-2450N-A/V 上軸・竪軸關係 MAIN SHAFT & UPRIGHT SHAFT COMPONENTS

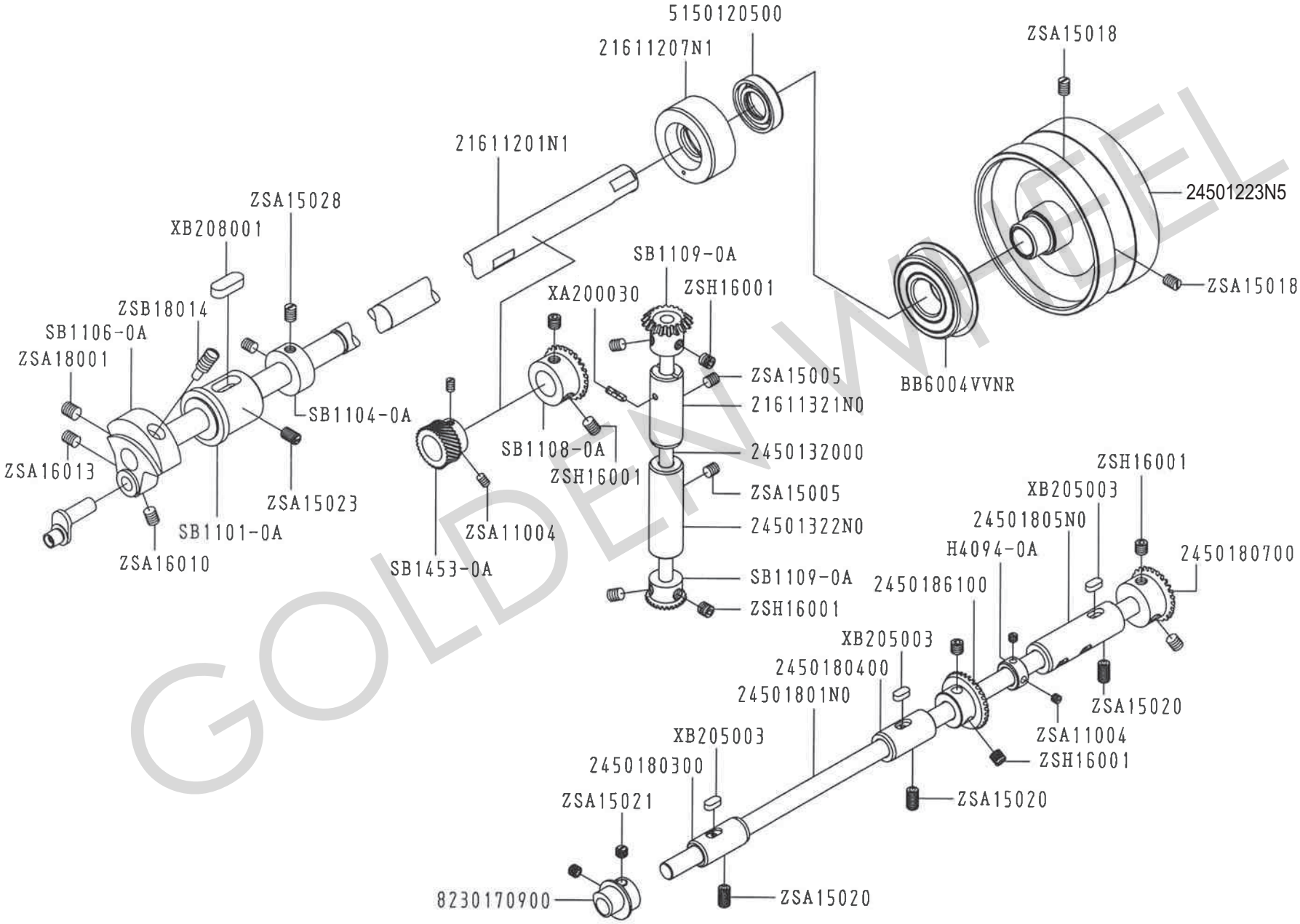

GOLDEN WHEEL

D. CS-2450N-A/V 上軸·竪軸關係 MAIN SHAFT & UPRIGHT SHAFT COMPONENTS

零件號碼 Part No.	零件名稱	Name of Part	件數 Q'TY 2450N-A	零件號碼 Part No.	零件名稱	Name of Part	件數 Q'TY 2450N-A
21611201N1	上軸	ARM SHAFT	1	BB6004VVNR	軸承	BALL BEARING	1
21611207N1	油蓋套管	OIL SEAL HOUSING	1	XA200030	油芯	OIL WICK	1
24501223N5	皮帶輪(薄物仕	HAND WHEEL(FOR LIGHT MATERIAL)	1	XB205003	油棉	FELT	3
21611321N0	套管(上)	UPRIGHT BUSHING (UPPER)	1	XB208001	油棉	FELT	1
2450132000	竪軸	UPRIGHT SHAFT	1	ZSA11004	螺絲	SCREW (11/64-40x3.5)	4
24501322N0	套管(下)	UPRIGHT BUSHING (LOWER)	1	ZSA15005	螺絲	SCREW (15/64-28x13)	2
24501801N0	下軸	HOOK DRIVE SHAFT	1	ZSA15018	螺絲	SCREW (15/64-28x19)	2
2450180300	下軸套管(前)	LOWER SHAFT BUSHING ,F	1	ZSA15020	螺絲	SCREW (15/64-28x11)	3
2450180400	下軸套管(中)	LOWER SHAFT BUSHING ,M	1	ZSA15021	螺絲	SCREW (15/64-28x4.5)	2
24501805N0	下軸套管(後)	LOWER SHAFT BUSHING ,R	1	ZSA15023	螺絲	SCREW (15/64-28x10)	1
2450180700	齒輪	GEAR	1	ZSA15028	螺絲	SCREW (15/64-28x7)	2
2450186100	齒輪	GEAR	1	ZSA16010	螺絲	SCREW (1/4-40x4.5)	1
5150120500	油蓋	OIL SEAL	1	ZSA16013	螺絲	SCREW (1/4-40x5.5)	1
8230170900	送料偏心輪	FEED LIFTING ROCK CAM	1	ZSA18001	螺絲	SCREW (9/32-28x8)	1
SB1101-0A	大心套管(前)	ARM BUSHING (FRONT)	1	ZSB18014	螺絲	SCREW (9/32-28x17)	1
SB1104-0A	定環	ARM SHAFT COLLAR	1	ZSH16001	螺絲	SCREW (1/4-40x6)	10
SB1106-0A	凸輪	COUNTER WEIGHT	1				
SB1108-0A	大心傘齒輪	ARM SHAFT LEVER GEAR	1				
SB1109-0A	竪軸傘齒輪	PINION	2				
SB1453-0A	針振齒輪(小)	NEEDLE VIBRATION PINION	1				
H4094-0A	定環	COLLAR	1				

GOLDEN WHEEL

E. CS-2450N-A/V 釜軸關係 HOOK SHAFT COMPONENTS

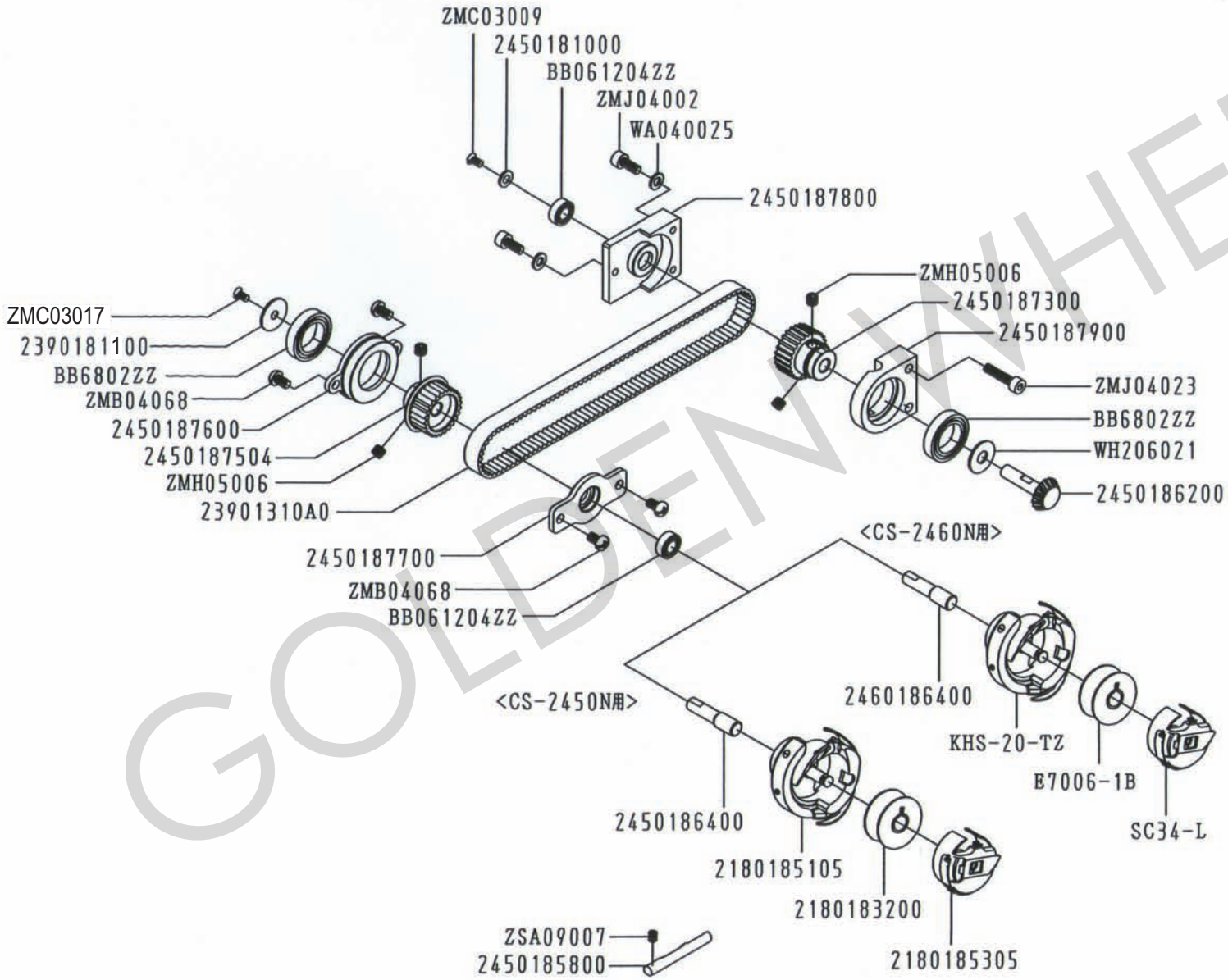

GOLDEN WHEEL

E. CS-2450N-A/V 釜軸關係 HOOK SHAFT COMPONENTS

零件號碼 Part No.	零件名稱	Name of Part	件數 Q'TY 2450N	件數 Q'TY 2460N	零件號碼 Part No.	零件名稱	Name of Part	件數 Q'TY 2450N	件數 Q'TY 2460N
2180183200	梭仔	Bobbin	1	0	WA040025	墊圈	WASHER	3	3
2180185105	梭頭	Hook Asm.	1	0	WH206021	墊圈	WASHER	1	1
2180185305	梭殼	Bobbin Case Asm.	1	0	ZMB04068	螺絲	SCREW (M4-0.7x7)	4	4
23901310A0	齒形皮帶	COG BELT	1	1	ZMC03009	螺絲	SCREW (M3-0.5x6)	1	1
2390181100	押板	PRESSER PLATE	1	1	ZMH05006	螺絲	SCREW (M5-0.8x4)	4	4
2450185800	釜擋	POSITIONING FINGER	1	1	ZMJ04002	螺絲	SCREW (M4-0.7x10)	3	3
2450181000	押板	PRESSER PLATE	1	1	ZMJ04023	螺絲	SCREW (M4-0.7x18)	2	2
2450186200	齒輪	GEAR	1	1	ZSA09007	螺絲	SCREW (SM9/64-40x4)	1	1
2450186400	釜軸	HOOK SHAFT	1	0	ZMC03017	螺絲	**SCREW**	1	1
2450187300	齒形皮帶輪	PULLY ASM	1	1					
2450187504	齒形皮帶輪(組)	PULLY ASM	1	1					
2450187600	滾珠軸承架	BALL BEARING SUPPORT	1	1					
2450187700	滾珠軸承架	BALL BEARING SUPPORT	1	1					
2450187800	滾珠軸承架	BALL BEARING SUPPORT	1	1					
2450187900	滾珠軸承架	BALL BEARING SUPPORT	1	1					
2460186400	釜軸	HOOK SHAFT	0	1					
BB061204ZZ	滾珠軸承	BALL BEARING	2	2					
BB6802ZZ	滾珠軸承	BALL BEARING	2	2					
E7006-1B	梭仔	Bobbin	0	1					
KHS-20-TZ	梭頭	Hook Asm.	0	1					
SC34-L	梭殼	Bobbin Case Asm.	0	1					

GOLDEN WHEEL

F. CS-2450N-A/V 針棒・天秤關係 NEEDLE BAR & THREAD TAKE-UP LEVER COMPONENTS

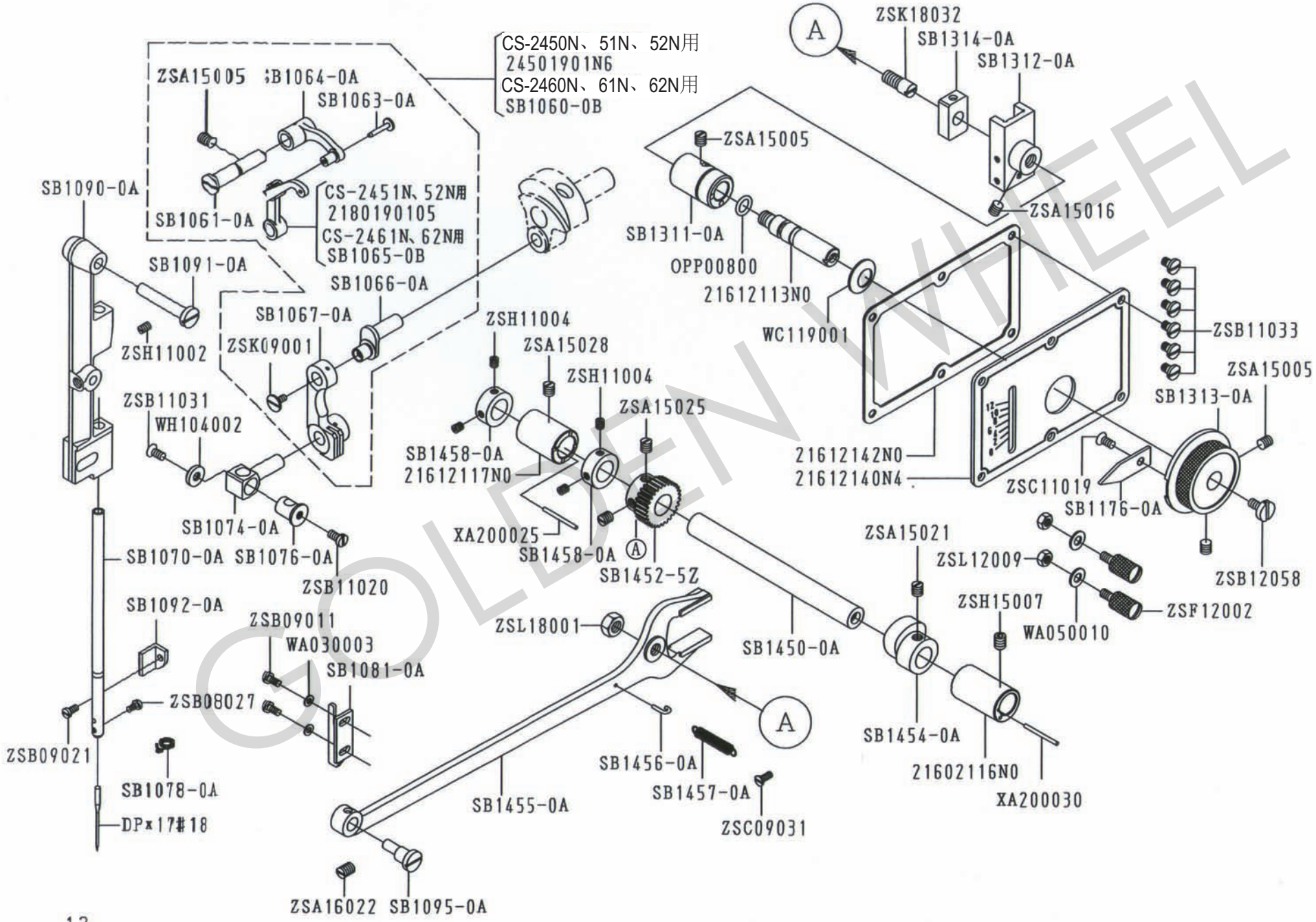

GOLDEN WHEEL

F. CS-2450N-A/V 針棒·天秤關係 NEEDLE BAR & THREAD TAKE-UP LEVER COMPONENTS

零件號碼 Part No.	零件名稱	Name of Part	件數 Q'TY 2450N	件數 Q'TY 2460N
21602116N0	凸輪軸套管(前)	CAM SHAFT BUSHING (FRONT)	1	1
21612113N0	針振調整軸	ZIGZAG REGULATOR CRANK	1	1
21612117N0	凸輪軸套管(後)	ZIGZAG BUSHING REAR	1	1
21612140N4	針振目盛板	ZIGZAG INDICATOR PLATE	1	1
21612142N0	油封	PACKING	1	1
2180190105	天秤	BALANCE ASM.	1	0
24501901N6	天秤組	BALANCE ASM.	1	0
DPx17#18	針	NEEDLE	1	1
SB1060-0B	天秤組	BALANCE ASM.	0	1
SB1061-0A	天秤固定銷	TAKE-UP LEVER LINK	1	1
SB1063-0A	天秤鉚釘	BALANCE CRANK PIN	1	1
SB1064-0A	天秤架	BALANCE CRANK BRACKET	1	1
SB1065-0B	天秤	BALANCE ASM.	0	1
SB1066-0A	針棒連結軸	NEEDLE BAR CRANK	1	1
SB1067-0A	針棒連結桿	NEEDLE BAR CRANK ROD	1	1
SB1070-0A	針棒	NEEDLE BAR	1	1
SB1074-0A	針棒鉗	NEEDLE BUSHING	1	1
SB1076-0A	針棒鉗固定	NEEDLE BAR BRACKET	1	1
SB1078-0A	線掛	THREAD GUIDE	1	1
SB1081-0A	固定板	NEEDLE BAR CONNECTING LINK GUIDE	1	1
SB1090-0A	針柱座	NEEDLE BAR FRAME	1	1
SB1091-0A	針柱座固定	NEEDLE HINGE PIN	1	1
SB1092-0A	針柱座定位	NEEDLE BAR FRAME POSITION	1	1
SB1095-0A	針落調整螺	ECCENTRIC STUD	1	1
SB1176-0A	針振指針	NEEDLE VIBRATOR STOP INDEX	1	1
SB1311-0A	套管	ZIGZAG REGULATOR BUSHING	1	1
SB1312-0A	針振調節器	ZIGZAG REGULATOR	1	1
SB1313-0A	旋鈕	DIAL	1	1
SB1314-0A	滑塊	ZIGZAG SLIDE BLOCK	1	1
SB1450-0A	針振驅動軸	ZIGZAG DRIVE CAM SHAFT	1	1
SB1452-5Z	針振齒輪(大)	ZIGZAG BEVEL GEAR	1	1
SB1454-0A	凸輪	NEEDLE VIBRATING CAM	1	1
SB1455-0A	針振三叉	ZIGZAG DRIVE FORK	1	1
SB1456-0A	彈簧掛勾	ZIGZAG SPRING HOOK	1	1
SB1457-0A	拉伸彈簧	ZIGZAG SPRING (SMALL)	1	1
SB1458-0A	定環	ZIGZAG COLLAR	2	2

零件號碼 Part No.	零件名稱	Name of Part	件數 Q'TY 2450N	件數 Q'TY 2460N
OPP00800	O形環	O-RINGS	1	1
WA030003	墊圈	WASHER	2	2
WA050010	平盤圈	WASHER	2	2
WC119001	盤形墊圈	SPRING WASHER	1	1
WH104002	墊圈	WASHER	1	1
XA200025	油線	OIL WICK	1	1
XA200030	油線	OIL WICK	1	1
ZSA15005	螺絲	SCREW (SM15/64-28x13)	4	4
ZSA15016	螺絲	SCREW (SM15/64-28x7)	1	1
ZSA15021	螺絲	SCREW (SM15/64-28x4.5)	1	1
ZSA15025	螺絲	SCREW (SM15/64-28x6)	2	2
ZSA15028	螺絲	SCREW (SM15/64-28x7)	1	1
ZSA16022	螺絲	SCREW (SM1/4-40x7)	1	1
ZSB08027	螺絲	SCREW (SM1/8-40x4.5)	1	1
ZSB09011	螺絲	SCREW (SM9/64-40x6.5)	2	2
ZSB09021	螺絲	SCREW (SM9/64-40x7.7)	1	1
ZSB11020	螺絲	SCREW (SM11/64-40x6.5)	1	1
ZSB11031	螺絲	SCREW (SM11/64-40x3.2)	1	1
ZSB11033	螺絲	SCREW (SM11/64-40x7)	6	6
ZSB12058	螺絲	SCREW (SM3/16-32x6.5)	1	1
ZSC09031	螺絲	SCREW (SM9/64-40x11)	1	1
ZSC11019	螺絲	SCREW (SM11/64-40x5.5)	1	1
ZSF12002	螺絲	SCREW (SM3/16-32x10)	2	2
ZSH11002	螺絲	SCREW (SM11/64-40x6)	1	1
ZSH11004	螺絲	SCREW (SM11/64-40x5)	4	4
ZSH15007	螺絲	SCREW (SM15/64-28x8)	1	1
ZSK09001	螺絲	SCREW (SM9/64-40)	1	1
ZSK18032	螺絲	SCREW (SM9/32-28)	1	1
ZSL12009	螺絲	NUT (SM3/16-32)	2	2
ZSL18001	螺絲	NUT (SM9/32-28)	1	1

GOLDEN WHEEL

G. CS-2450N-A/V　送料關係 (一)　FEED MECHANISM COMPONENTS

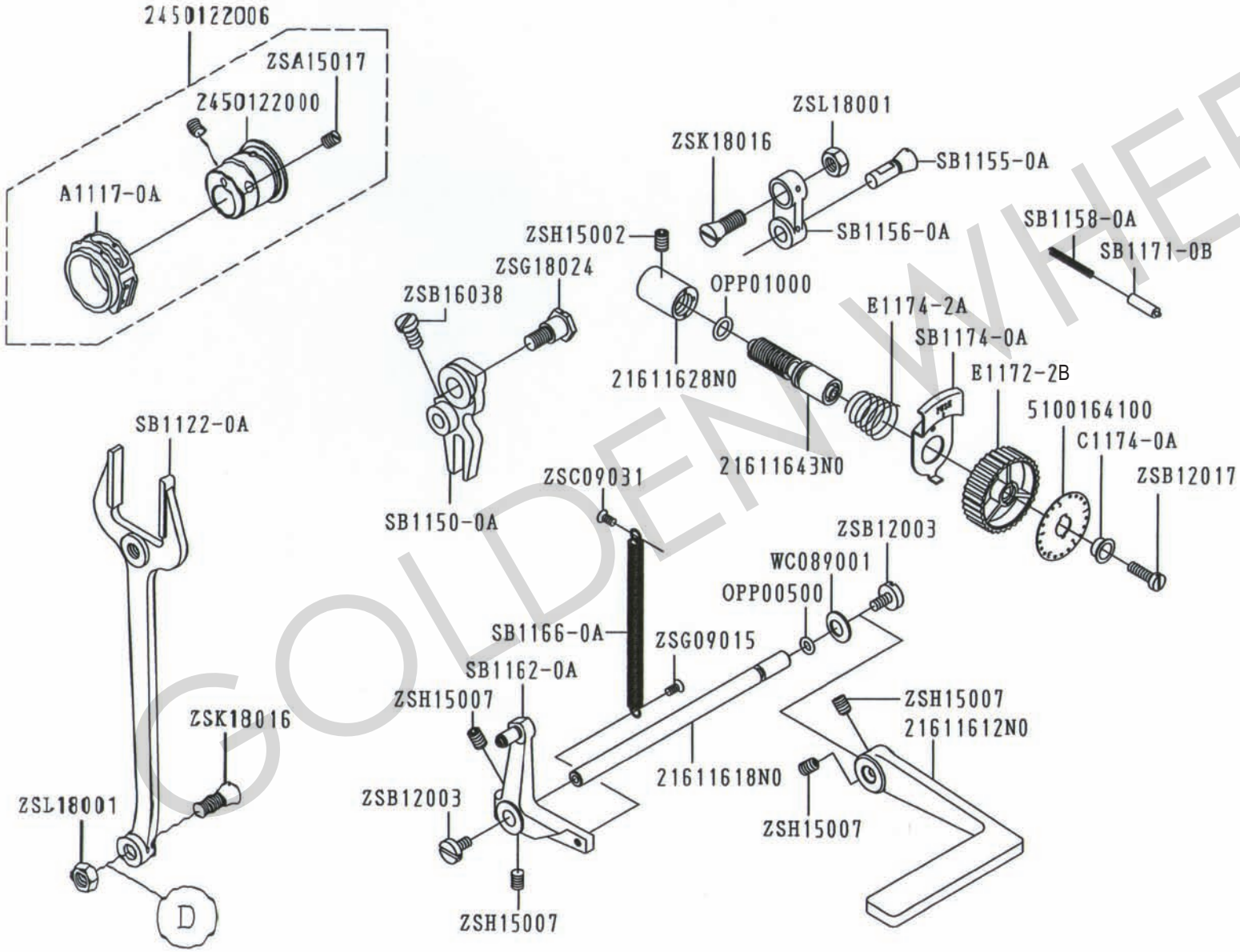

GOLDEN WHEEL

G. CS-2450N-A/V 送料關係(一) FEED MECHANISM COMPONENTS

零件號碼 Part No.	零件名稱	Name of Part	件數 Q'TY 2450N	件數 Q'TY 2460N	零件號碼 Part No.	零件名稱	Name of Part	件數 Q'TY 2450N	件數 Q'TY 2460N
21611612N0	倒縫槓桿	REVERSE FEED CONTROL LEVER	1	1	OPP00500	O形環	O-RINGS	1	1
21611618N0	連結軸	REVERSE FEED CONTROL LEVER	1	1	OPP01000	O形環	O-RINGS	1	1
21611628N0	調節螺絲套	FEED REGULATING STUD	1	1	WC089001	盤形墊圈	SPRING WASHER	1	1
21611643N0	調節螺絲	FEED REGULATING STUD	1	1	ZSA15017	螺絲	SCREW (SM15/64-28x8.5)	2	2
2450122000	偏心輪	FEED CAM	1	1	ZSG09015	螺絲	SCREW (SM9/64-40x6.5)	1	1
2450122006	偏心輪組	FEED CAM ASM.	1	1	ZSB12003	螺絲	SCREW (SM3/16-32x6.5)	2	2
5100164100	刻度盤	LENGTH CONTROL PLATE	1	1	ZSB12017	螺絲	SCREW (SM3/16-28x15)	1	1
A1117-0A	偏心輪環	CAM RETAINER	1	1	ZSB16038	螺絲	SCREW (SM1/4-40x10)	1	1
C1174-0A	墊片	WASHER	1	1	ZSC09031	螺絲	SCREW (SM9/64-40x11)	1	1
E1172-2B	刻度盤	FEED REGULATING STUD HEAD	1	1	ZSG18024	螺絲	SCREW (SM9/32-28x11)	1	1
E1174-2A	壓縮彈簧	SPRING	1	1	ZSH15002	螺絲	SCREW (SM15/64-28x8)	1	1
SB1122-0A	連結叉桿	FEED FORKED CONNECTION	1	1	ZSH15007	螺絲	SCREW (SM15/64-28x8)	4	4
SB1150-0A	送料調節器	FEED REGULATOR (FORKED)	1	1	ZSK18016	螺絲	SCREW (SM9/32-28)	2	2
SB1155-0A	連結軸	HINGE STUD	1	1	ZSL18001	螺帽	NUT (SM9/32-28)	2	2
SB1156-0A	二叉連桿	FEED CONNECTING LINK	1	1					
SB1158-0A	壓縮彈簧	FEED SPRING	1	1					
SB1162-0A	倒縫曲柄組	REVERSE FEED CRANK	1	1					
SB1166-0A	拉伸彈簧	FEED REVERSE SPRING	1	1					
SB1171-0B	定位銷	FEED REGULATING STUD LOCK	1	1					
SB1174-0A	操作板	STOPPER PIN RELEASING LEVER	1	1					

GOLDEN WHEEL

H. CS-2450N-A/V　送料關係 (二)　FEED MECHANISM COMPONENTS

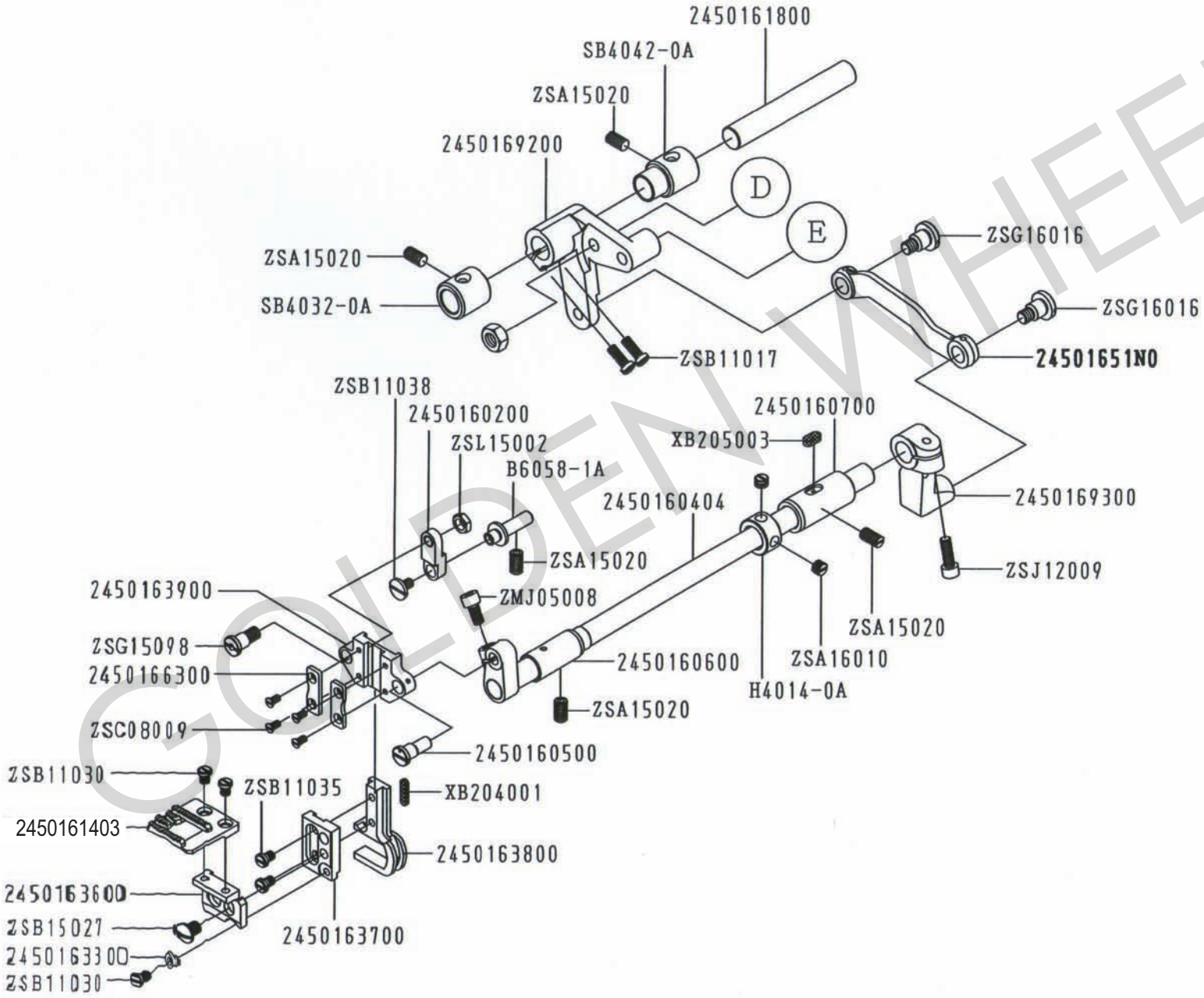

GOLDEN WHEEL

H. CS-2450N-A/V 送料關係(二) FEED MECHANISM COMPONENTS

零件號碼 Part No.	零件名稱	Name of Part	件數 Q'TY 2450N	件數 Q'TY 2460N	零件號碼 Part No.	零件名稱	Name of Part	件數 Q'TY 2450N	件數 Q'TY 2460N
2450160200	送料台連接棒	FEED BAR LINK	1	1	XB204001	油棉	OIL WICK	1	1
2450160404	搖動軸(結合)	FEED ROCKER SHAFT COM.	1	1	XB205003	油棉	OIL WICK	1	1
2450160500	螺絲	HINGE SCREW	1	1	ZMJ05008	螺絲	SCREW (M5-0.8x10)	1	1
2450160600	搖動軸套管(前)	BUSING, FRONT	1	1	ZSA15020	螺絲	SCREW (SM15/64-28x11)	5	5
2450160700	搖動軸套管(後)	BUSING, REAR	1	1	ZSA16010	螺絲	SCREW (SM1/4-40x4.5)	2	2
2450161403	送料齒	FEED DOG	1	1	ZSB11017	螺絲	SCREW (SM11/64-40x12)	2	2
2450161800	送料軸	FEED ROCK SHAFT	1	1	ZSB11030	螺絲	SCREW (SM11/64-40x5.5)	3	3
2450163300	送料齒高度調節	ADJUSTING PLATE	1	1	ZSB11035	螺絲	SCREW (SM11/64-40x6)	2	2
2450163600	送料齒架	FEED DOG SUPPORT	1	1	ZSB11038	螺絲	SCREW (SM11/64-40x7.5)	1	1
2450163700	送料齒架	FEED DOG SUPPORT	1	1	ZSB15027	螺絲	SCREW (SM15/64-28x7)	1	1
2450163800	送料台二叉	FEED LIFTING FORK	1	1	ZSC08009	螺絲	SCREW (SM1/8-44x6.2)	4	4
2450163900	送料台基座	FEED BAR SUPPORT	1	1	ZSG16016	螺絲	HINGE SCREW	2	2
24501651N0	連桿	RENGTHWISE FEED ROD	1	1	ZSG15098	螺絲	HINGE SCREW	1	1
2450166300	滑道蓋	FEED BAR SUPPORT PLATE	2	2	ZSJ12009	螺絲	SCREW (SM3/16-28x15)	1	1
2450169200	送料曲柄	FEED ROCKER SHAFT CRANK	1	1	ZSL15002	螺帽	NUT (SM15/64-28)	1	1
2450169300	送料曲柄	FEED ROCKER SHAFT CRANK	1	1					
B6058-1A	固定銷	PIN	1	1					
H4014-0A	定環	THRUST COLLAR	1	1					
SB4032-0A	套環	BUSHING	1	1					
SB4042-0A	套環	BUSHING	1	1					

GOLDEN WHEEL

I. CS-2450N-A/V 押脚關係 (一) PRESSER BAR & KNEE LIFTER COMPONENTS

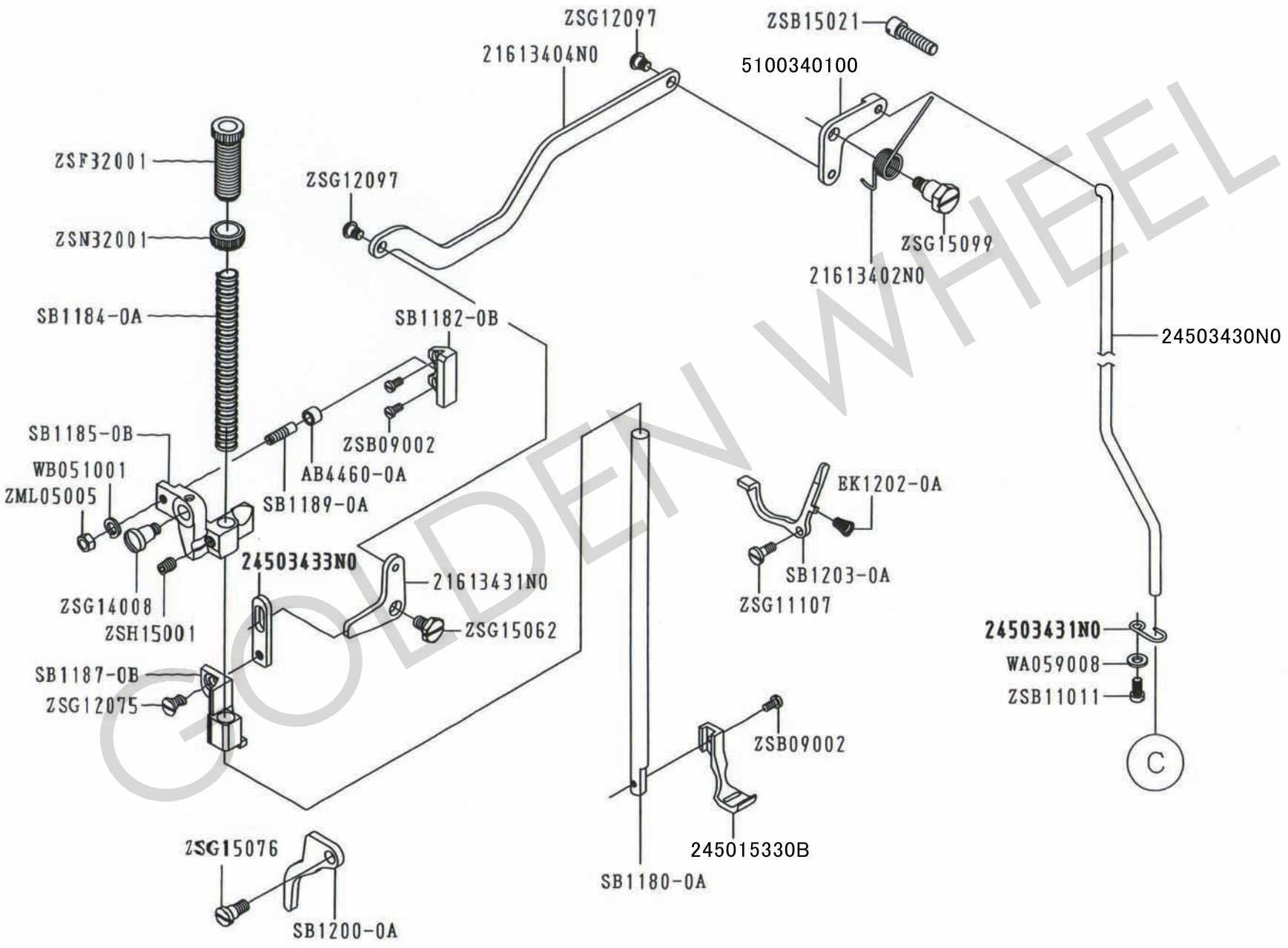

GOLDEN WHEEL

I. CS-2450N-A/V 押脚關係(一) PRESSER BAR & KNEE LIFTER COMPONENTS

零件號碼 Part No.	零件名稱	Name of Part	件數 Q'TY 2450N	2460N	零件號碼 Part No.	零件名稱	Name of Part	件數 Q'TY 2450N	2460N
21613402N0	彈簧	SPRING	1	1	WA059008	墊圈	SPRING WASHER	1	1
21613404N0	壓棒堤舁桿	SIDE CONNECTING BAR	1	1	WB051001	彈簧墊圈	SPRING WASHER	1	1
21613431N0	壓縮滑座	THREAD RELEASING PLATE	1	1	ZML05005	螺帽	NUT(M5-0.8)	1	1
5100340100	押棒上升臂	PRESSER BAR LIFTING LINK	1	1	ZSB09002	螺絲	SCREW (SM9/64-40x10)	3	3
24503430N0	連接棒	KNEE LIFTER ROD	1	1	ZSB11011	螺絲	SCREW (SM11/64-40x9)	1	1
24503431N0	連接棒定位彈	KNEE LIFTER ROD GIDE	1	1	ZSB15021	螺絲	SCREW (SM15/64-28x23.5)	1	1
AB4460-0A	滾珠	ROLL COLLAR	1	1	ZSF32001	螺絲	PRESSER BAR ADJUSTING SCREW	1	1
EK1202-0A	彈簧	SPRING	1	1	ZSG11107	螺絲	SCREW (SM11/64-40x7)	1	1
SB1180-0A	押棒	PRESSER BAR	1	1	ZSG12075	螺絲	SCREW (SM3/16-32x3.5)	1	1
SB1182-0B	定位板	GUIDE	1	1	ZSG12097	螺絲	SCREW (SM3/16-32x3.3)	2	2
SB1184-0A	壓縮彈簧	TENSION SPRING	1	1	ZSG14008	螺絲	SCREW (SM7/32-32x5)	1	1
SB1185-0B	押棒固定座	PRESSER BAR FIXED BASE	1	1	ZSG15062	螺絲	SCREW (SM15/64-28x6.7)	1	1
24503433N0	連接板	LIFTING LEVER LINK	1	1	ZSG15076	螺絲	SCREW (SM15/64-28x8)	1	1
SB1187-0B	押棒固定座	LIFTING BRACKET	1	1	ZSG15099	螺絲	SCREW (SM15/64-28x6.3)	1	1
SB1189-0A	螺絲	SCREW M5-0.8×12	1	1	ZSH15001	螺絲	SCREW (SM15/64-28x6)	1	1
SB1200-0A	提升桿	PROMOTE SHAFT	1	1	ZSN32001	螺絲	NUT (1/2-28)	1	1
SB1203-0A	鬆線架	TENSION RELEASING LEVER	1	1					
245015330B	押脚	WORK CLAMP FOOT	1	1					

GOLDEN WELL

J. CS-2450N-A/V 押脚關係 (二) PRESSER BAR & KNEE LIFTER COMPONENTS

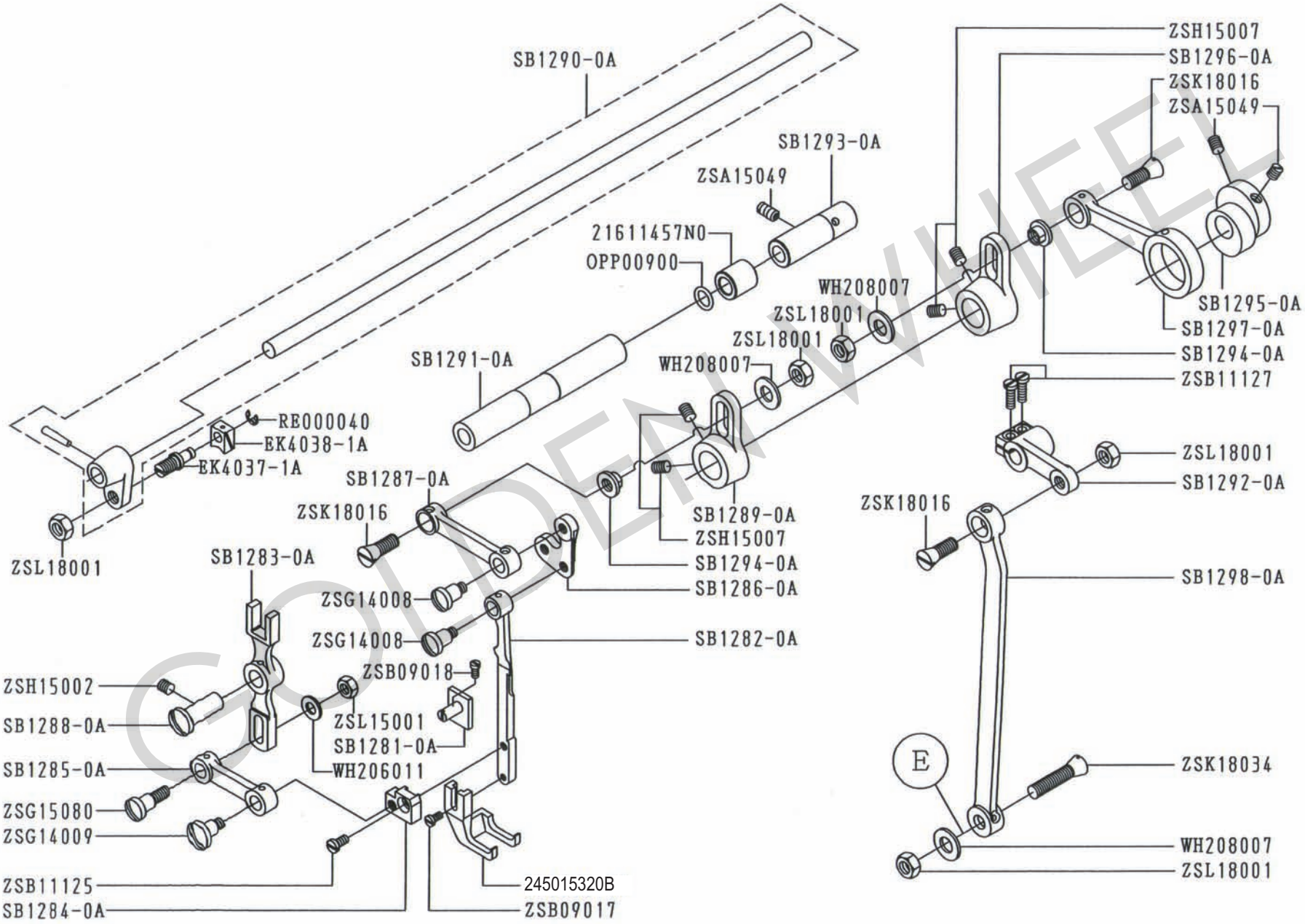

GOLDEN WHEEL

J. CS-2450N-A/V 押脚關係(二) PRESSER BAR & KNEE LIFTER COMPONENTS

零件號碼 Part No.	零件名稱	Name of Part	件數 Q'TY 2450N	2460N
21611457N0	中軸中套管	FEED ROCK SHAFT BUSHING(MID.)	1	2
EK4037-1A	銷	PIN	1	1
EK4038-1A	送料角驅	SLIDE BLOCK	1	1
245015320B	外押脚	OUTSIDE PRESSER FOOT	1	1
SB1281-0A	押脚擋板	STOP BRACKET	1	1
SB1282-0A	押脚引導板	OUTSIDE PRESSER BAR	1	1
SB1283-0A	前後叉臂	FEED FORKED CONNECTION	1	1
SB1284-0A	擋塊	GUIDE BRACKET	1	1
SB1285-0A	連桿	LIFTING LEVER LINK	1	1
SB1286-0A	L型連桿	GUIDE BRACKET	1	1
SB1287-0A	連桿	CONNECTING ROD	1	1
SB1288-0A	銷	PIN	1	1
SB1289-0A	搖動曲柄(小)	CRANK	1	1
SB1290-0A	上送料軸(組)	FEED ROCK SHAFT ASM.	1	1
SB1290-1A	上送料軸	FEED ROCK SHAFT.	1	1
SB1290-2A	上部舉常搖	CRANK	1	1
SB1293-0A	中軸後套管	FEED ROCK SHAFT BUSHING(REAR)	1	1
SB1294-0A	螺絲帽	FEED LIFTING ROCK SHAFT CONNECTING	2	2
SB1295-0A	偏心輪	FEED REGULATOR STUD	1	1
SB1296-0A	搖動曲柄(大)	CRANK	1	1
SB1297-0A	送料連接桿	FEED CONNECTING LINK	1	1
SB1298-0A	前後連桿	CONNECTING ROD	1	1

零件號碼 Part No.	零件名稱	Name of Part	件數 Q'TY 2450N	2460N
OPP00900	O形環	O-RINGS	1	1
RE000040	止輪	E RING	1	1
WH206011	研磨墊圈	WASHER	1	1
WH208007	研磨墊圈	WASHER	3	3
ZSA15049	螺絲	SCREW (15/64-28×12)	3	3
ZSB09017	螺絲	SCREW (9/64-40×8)	1	1
ZSB09018	螺絲	SCREW (9/64-40×6.5)	1	1
ZSB11125	螺絲	SCREW (11/64-40×6)	1	1
ZSB11127	螺絲	SCREW (11/64-40×10.5)	2	2
ZSG14008	螺絲	SCREW (7/32-32×5)	2	2
ZSG14009	螺絲	SCREW (7/32-32×5)	1	1
ZSG15080	螺絲	SCREW (15/64-28×12)	1	1
ZSH15002	螺絲	SCREW (15/64-28×8)	1	1
ZSH15007	螺絲	SCREW (15/64-28×8)	4	4
ZSK18016	螺絲	SCREW (9/32-28)	3	3
ZSK18034	螺絲	SCREW (9/32-28)	1	1
ZSL15001	螺帽	NUT (15/64-28)	1	1
ZSL18001	螺帽	NUT (9/32-28)	5	5

GOLDEN WHEEL

K. CS-2450N-A/V 押脚關係 (三) PRESSER BAR & KNEE LIFTER COMPONENTS

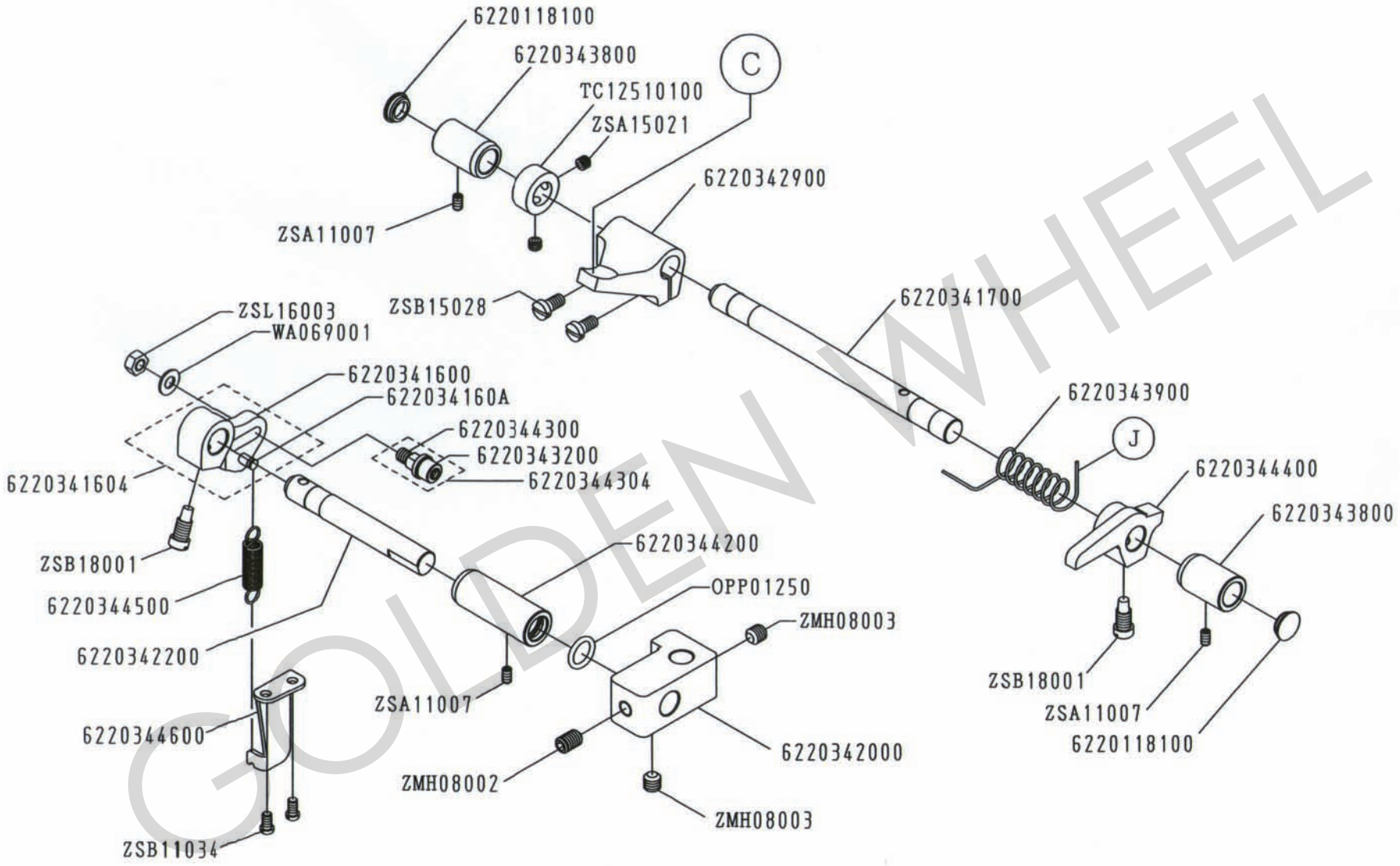

GOLDEN WHEEL

K. CS-2450N-A/V 押脚關係(三) PRESSER BAR & KNEE LIFTER COMPONENTS

零件號碼 Part No.	零件名稱	Name of Part	件數 Q'TY 2450N	2460N
6220118100	油蓋	RUBBER PLUG	2	2
6220341600	連接器	KNEE LIFTER CRANK	1	1
6220341604	連接器(結合)	KNEE LIFTER CRANK COM.	1	1
622034160A	彈簧釣	SPRING SUSPENSION	1	1
6220341700	連接器軸	KNEE LIFTER CRANK SHAFT	1	1
6220342000	連接器	KNEE LIFTER CRANK	1	1
6220342200	軸	SHAFT	1	1
6220342900	連接器	KNEE LIFTER CRANK	1	1
6220343200	滾仔	ROLLER	1	1
6220343800	套環	BUSHING	2	2
6220343900	彈簧	SPRING	1	1
6220344200	套環	BUSHING	1	1
6220344300	滾仔軸	ROLLER STUD	1	1
6220344304	滾仔軸(結合)	ROLLER STUD COM.	1	1
6220344400	連接器	KNEE LIFTER CRANK	1	1
6220344500	彈簧	SPRING	1	1
6220344600	彈簧釣	SPRING SUSPENSION	1	1

零件號碼 Part No.	零件名稱	Name of Part	件數 Q'TY 2450N	2460N
OPP01250	O形環 12.5	O-rings ϕ 12.5	1	1
WA069001	**平墊圈**	**Washer**	1	1
ZMH08002	螺絲	SCREW (M8-1.25x12)	1	1
ZMH08003	螺絲	SCREW (M8-1.25x8)	2	2
ZSA11007	螺絲	SCREW (SM11/64-40x8)	3	3
ZSB11034	螺絲	SCREW (SM11/64-40x8)	2	2
ZSB15028	螺絲	SCREW (SM15/64-28x11.5)	2	2
ZSB18001	螺絲	SCREW (SM9/32-28x16)	2	2
ZSL16003	螺帽	NUT (1/4-24)	1	1

GOLDEN WHEEL

L. CS-2450N-A/V 油潤滑關係 OIL LUBRICATION COMPONENTS

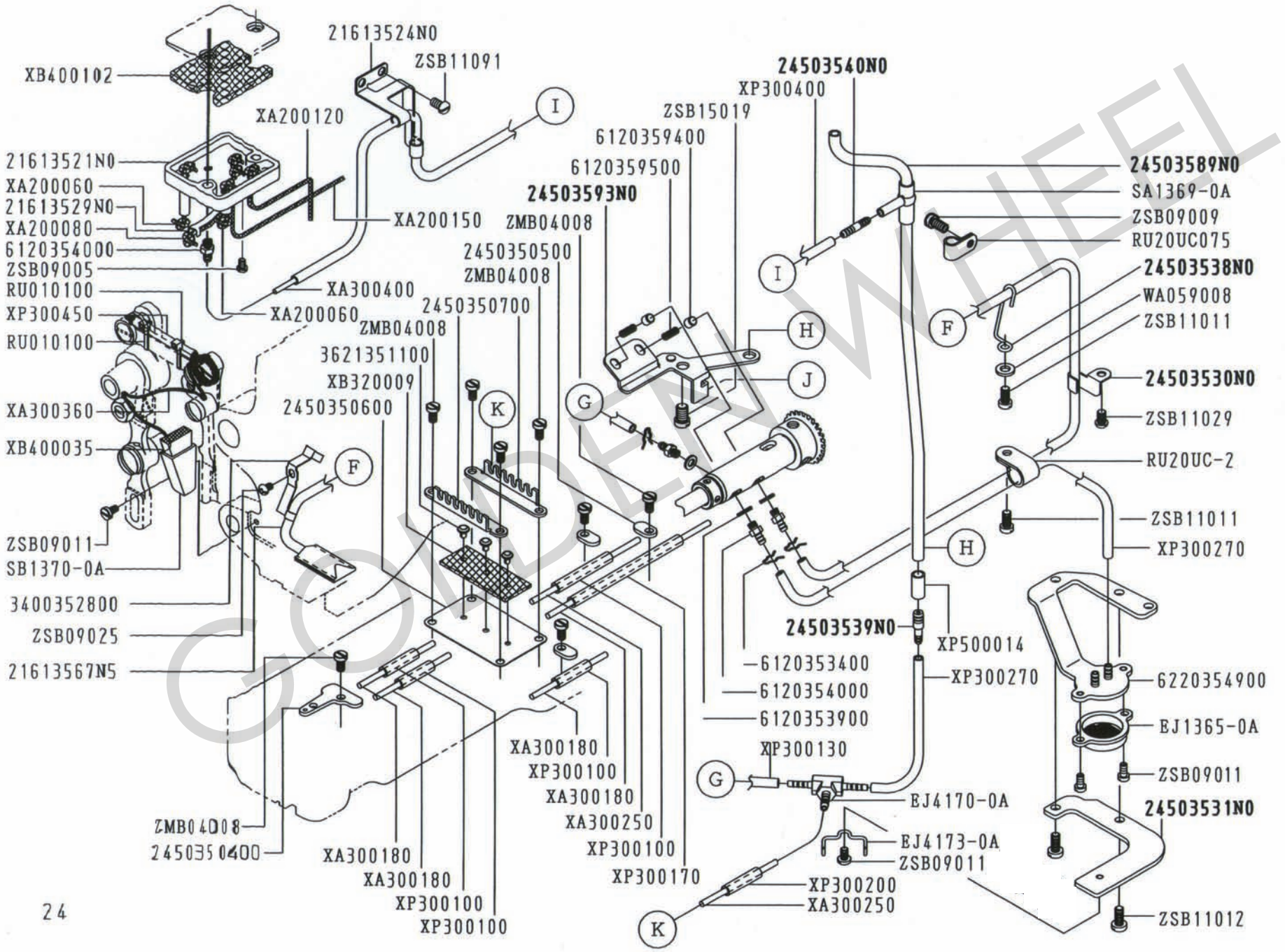

GOLDEN WHEEL

L. CS-2450N-A/V 油潤滑關係 OIL LUBRICATION COMPONENTS

零件號碼 Part No.	零件名稱	Name of Part	件數 Q'TY 2450N	2460N
21613521N0	上油槽	OIL TANK	1	1
21613524N0	油管固定板	OIL TUBE HOLDER	1	1
21613529N0	支持板	PLATE	1	1
21613567N5	油棉(組)	FELT ASM.	1	1
2450350400	支持板	PLATE	1	1
2450350500	支持板	PLATE	3	3
2450350600	支持板	PLATE	1	1
2450350700	支持板	PLATE	2	2
24503530N0	支持板	PLATE	1	1
24503538N0	支持金具	TUBE HOLDER	1	1
24503539N0	接頭	CONNECTING TUBE	1	1
24503540N0	接頭	CONNECTING TUBE	1	1
24503589N0	油導管	OIL PIPE	1	1
24503593N0	彈簧壓板	PLUNGER THRUST PLATE	1	1
3400352800	油管固定器	TUBE SUPPORT	1	1
3621351100	止金具	STOPPER	3	3
6120353400	固定彈簧	OIL TUBE HOLDER	3	3
6120353900	油封	GASKET	3	3
6120354000	接頭	CONNECTING SCREW	4	4
6120359400	作動銷	PLUNGER	2	2
6120359500	彈簧	SPRING	2	2
6220354900	固定板(結合)	BLACKET COM.	1	1
EJ1365-0A	濾器	FILTER	1	1
EJ4170-0A	接頭	CONNECTING TUBE	1	1
SA1369-0A	三通油管	OIL SUPPLY PIPE	1	1
SB1370-0A	油槽	OIL TANK	1	1

零件號碼 Part No.	零件名稱	Name of Part	件數 Q'TY 2450N	2460N
RU010100	尼龍紮線帶	NYLON CABLE TIE	2	2
RU20UC075	油線掛架	HOLDER	1	1
RU20UC-2	油線掛架	HOLDER	1	1
WA059008	平墊圈	Washer	1	1
XA200060	油線	OIL WICK	2	2
XA200080	油線	OIL WICK	1	1
XA200120	油線	OIL WICK	1	1
XA200150	油線	OIL WICK	1	1
XA300180	油線	OIL WICK	4	4
XA300250	油線	OIL WICK	2	2
XA300360	油線	OIL WICK	1	1
XA300400	油線	OIL WICK	1	1
XB320009	油棉	FELT	1	1
XB400035	油棉	OIL FELT	1	1
XB400102	油棉	OIL FELT	1	1
XP300100	油管	NYLON TUBE	4	4
XP300130	油管	NYLON TUBE	1	1
XP300170	油管	NYLON TUBE	1	1
XP300200	油管	NYLON TUBE	1	1
XP300270	油管	NYLON TUBE	2	2
XP300400	油管	NYLON TUBE	1	1
XP300450	油管	NYLON TUBE	1	1
XP500014	油管	NYLON TUBE	1	1
ZMB04008	螺絲	SCREW (M4-0.7x6)	8	8
ZSB09005	螺絲	SCREW (9/64-40x5)	1	1
ZSB09009	螺絲	SCREW (9/64-40x5)	1	1
ZSB09011	螺絲	SCREW (9/64-40x6.5)	3	3
ZSB09025	螺絲	SCREW (9/64-40x5)	1	1
ZSB11011	螺絲	SCREW (11/64-40x9)	2	2
ZSB11029	螺絲	SCREW (11/64-40x7)	1	1
ZSB11034	螺絲	SCREW (11/64-40x8)	2	2
ZSB11091	螺絲	SCREW (11/64-40x4)	2	2
ZSB15019	螺絲	SCREW (15/64-28x9)	1	1

GOLDEN WHEEL

M. CS-2450N-A/V 皮帯蓋関係 BELT COVER COMPONENTS

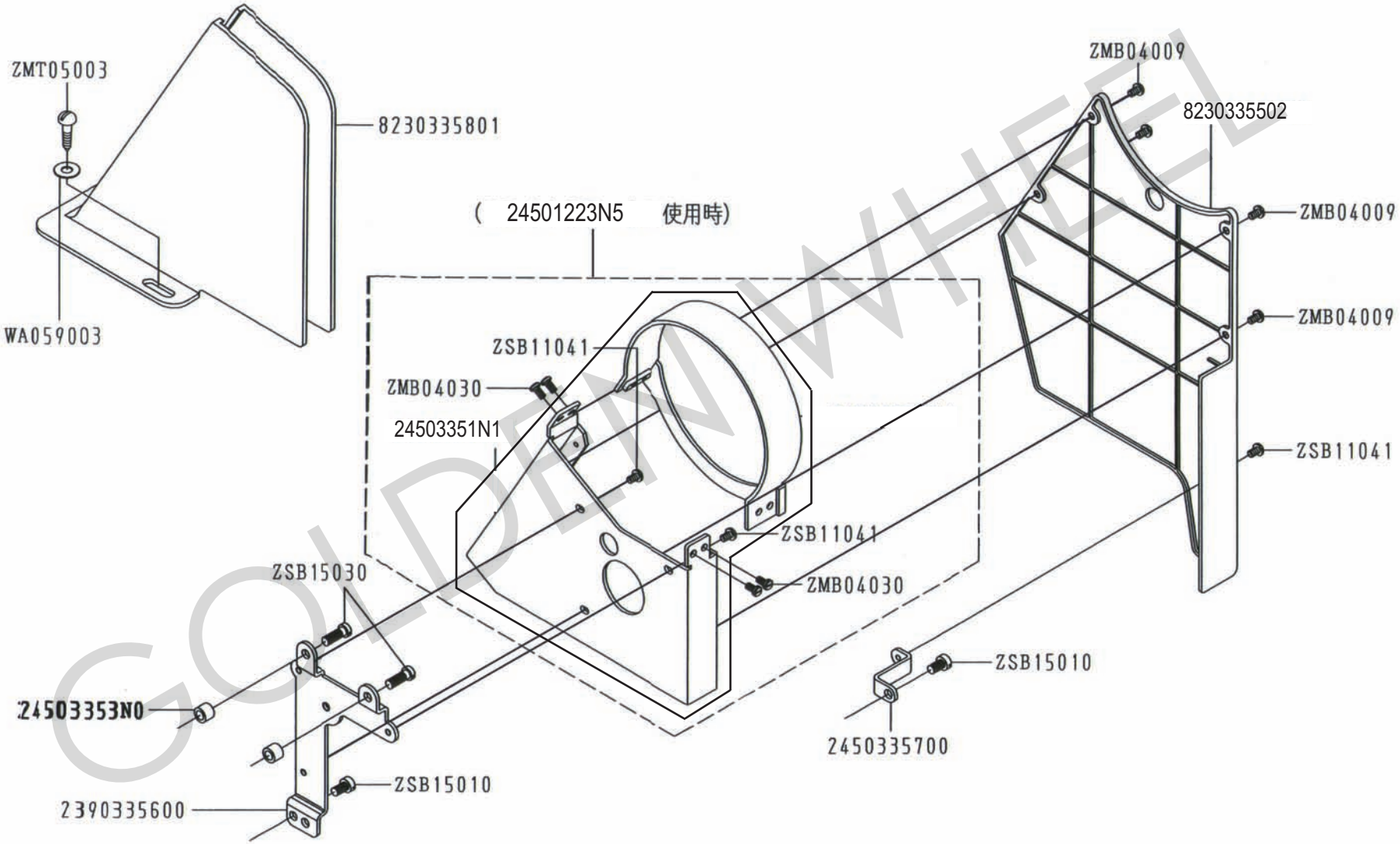

GOLDEN WHEEL

M. CS-2450N-A/V 皮帶輪蓋關係 BELT COVER COMPONENTS

零件號碼 Part No.	零件名稱	Name of Part	件數 Q'TY 2450N	件數 Q'TY 2460N	零件號碼 Part No.	零件名稱	Name of Part	件數 Q'TY 2450N	件數 Q'TY 2460N
2390335300	皮帶蓋定環	BELT COVER STUD	2	2	WA059003	平盤圈	WASHER	2	2
24503351N1	皮帶蓋組	BELT COVER	1	1	ZMB04009	螺絲	SCREW (M4-0.7x6)	8	8
2390335600	皮帶蓋固定板	BELT COVER SUPPORT	1	1	ZMT05003	木螺絲	WOOD SCREW	2	2
2450335700	皮帶蓋固定板	BELT COVER SUPPORT	1	1	ZSB11041	螺絲	SCREW (11/64-40x7)	3	3
8230335502	皮帶蓋	BELT COVER	1	1	ZSB15010	螺絲	SCREW (15/64-28x10)	2	2
8230335801	皮帶蓋	BELT COVER	1	1	ZSB15030	螺絲	SCREW (15/64-28x16.5)	2	2
83303351N0	皮帶蓋	BELT COVER	1	1					

GOLDEN WHEEL

N. CS-2450N-A/V 附件 ACCESSORIES

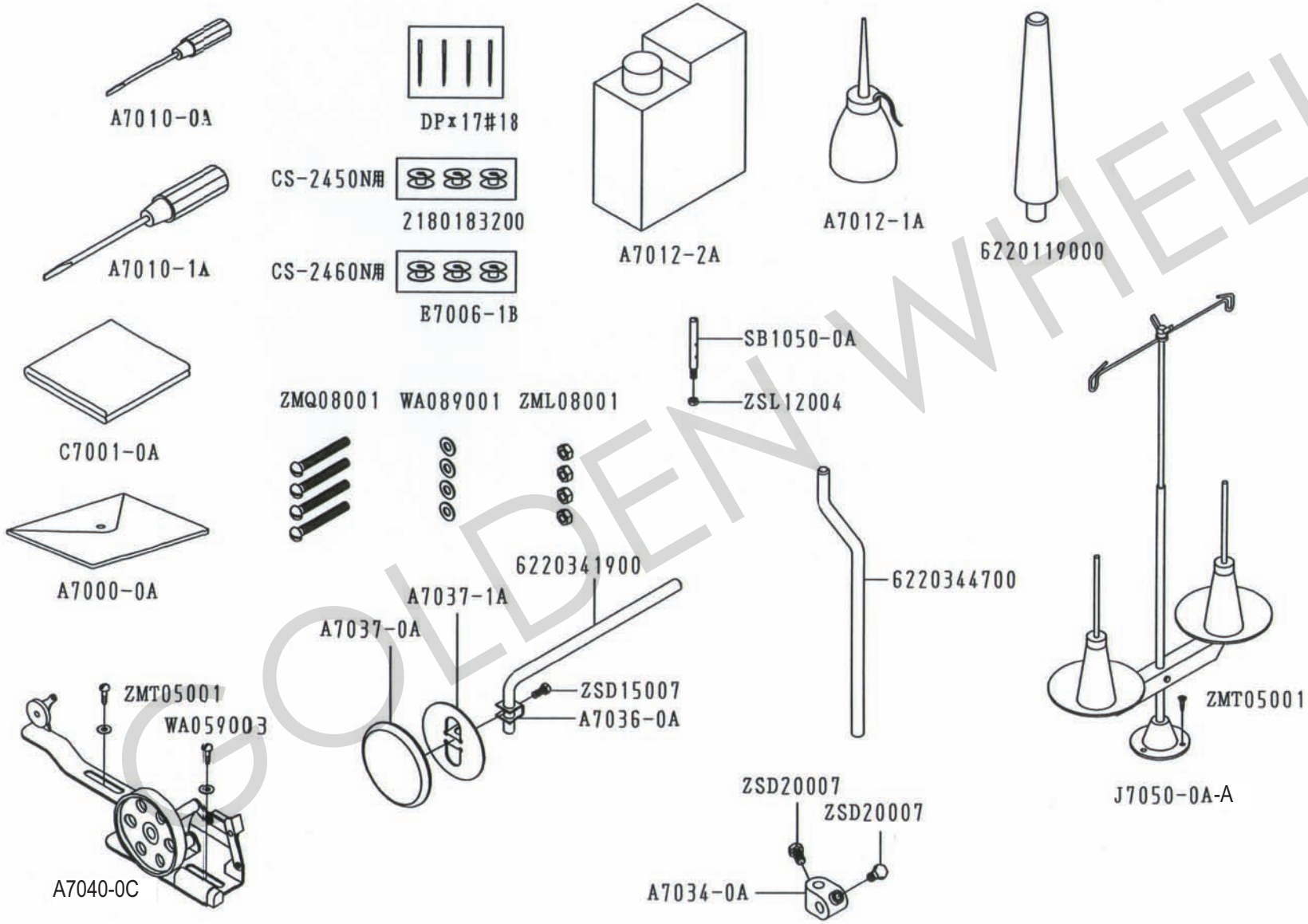

GOLDEN WHEEL

N. CS-2450N-A/V 附件 ACCESSORIES

零件號碼 Part No.	零件名稱	Name of Part	件數 Q'TY 2450N	2460N
2180183200	梭仔	BOBBIN	3	0
6220119000	枕木	HEAD REST WOOD	1	1
6220341900	脚押曲桿	KNEE LEVER ROD	1	1
6220344700	脚押曲桿	KNEE LEVER ROD	1	1
A7000-0A	工具袋	ACCESSORY BAG	1	1
A7010-0A	螺絲起子(小)	SCREW DRIVER (SMALL)	1	1
A7010-1A	螺絲起子(中)	SCREW DRIVER (MIDDLE)	1	1
A7012-1A	油壺(中)	OILER (MIDDLE)	1	1
A7012-2A	油壺(大)	OILER (LARGE)	1	1
A7034-0A	連接器	KNEE LIFTER CRANK	1	1
A7036-0A	固定支架	RETAINER	1	1
A7037-0A	脚弓大餅	KNEE GUIRD	1	1
A7037-1A	脚弓餅支架	KNEE PLATE	1	1
A7040-0C	捲線器組	BOBBIN WINDER ASSY.	1	1
C7001-0A	車頭蓋	VINYL COVER	1	1
DPx17#18	針	NEEDLE	4	4
E7006-1B	梭仔	BOBBIN	0	3
J7050-0A-A	線架組	THREAD STAND	1	1
SB1050-0A	線柱	THREAD GUIDE PIN	1	1

零件號碼 Part No.	零件名稱	Name of Part	件數 Q'TY 2450N	2460N
WA059003	平墊圈	WASHER	2	2
WA089001	平墊圈	WASHER	4	4
ZML08001	螺帽	NUT	4	4
ZMQ08001	螺絲	SCREW	4	4
ZMT05001	螺絲	SCREW	4	4
ZSD15007	螺絲	SCREW (15/64-28x14)	1	1
ZSD20007	螺絲	SCREW (5/16-18x16)	2	2
ZSL12004	螺帽	NUT (3/16-28)	1	1

GOLDEN WHEEL

GOLDEN WHEEL

啓翔股份有限公司
CHEE SIANG INDUSTRIAL CO.,LTD.

NO.32 WU CHUAN 7TH ROAD,WU KU INDUSTRIAL AREA,
WU KU HSIANG 24248,TAIPEI HSIEN,TAIWAN.