SiRUBA

零件圖

PARTS LIST

DL7200C

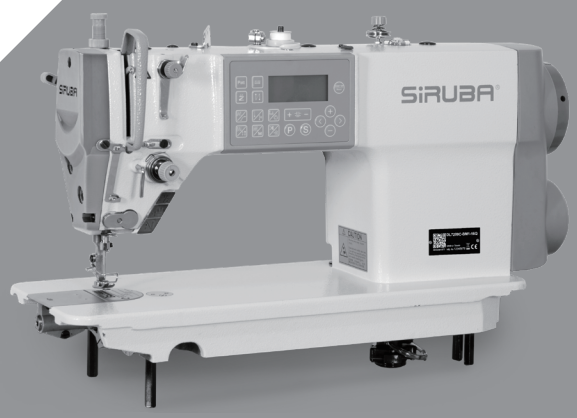

CE

SiRUBA TABLE CUT - OUT	Series	Item Code	Subclass / Remark	Mounting
	DL720 DL7200 DL6800 DL7300 DL6900 DL7400 DL7000	DL7000T-T1		Fully-submerged
				Date
				2021/03/04

單針高速直驅式平縫車全沉式桌板圖

單位／UNIT:mm

所有尺寸公差／DIFFERENCE:±2

DL7000T－T1－1070 長度(L):1070／重量:10kg±5%

DL7000T－T1 長度(L):1200／重量:11.4kg±5%

全封邊灰格紋光塑面合板

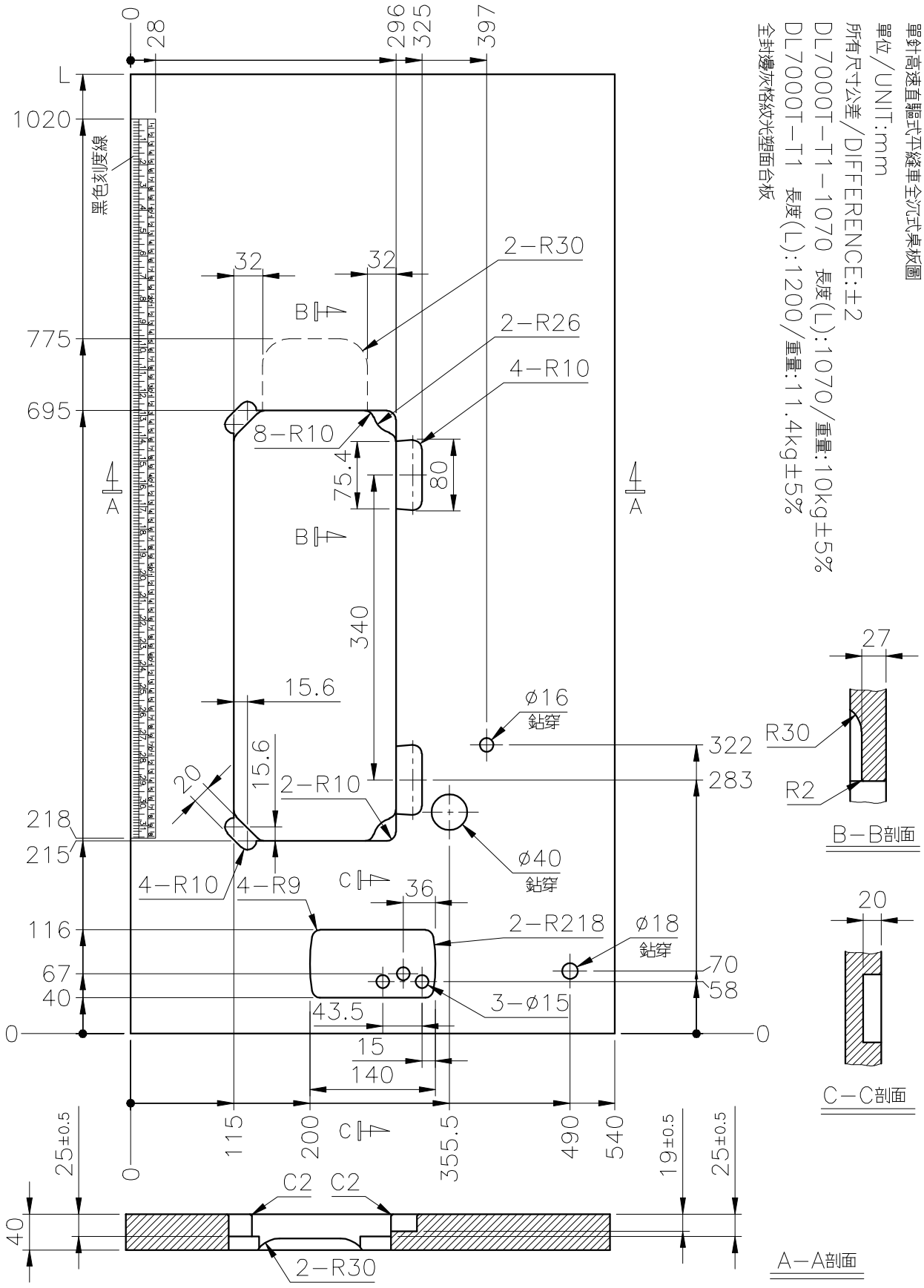

SIRUBA PARTS LIST	Series	Parts Group	Subclass Remark	Page
	DL7200C	LA		1 / 1
				Date
				2020/12/28

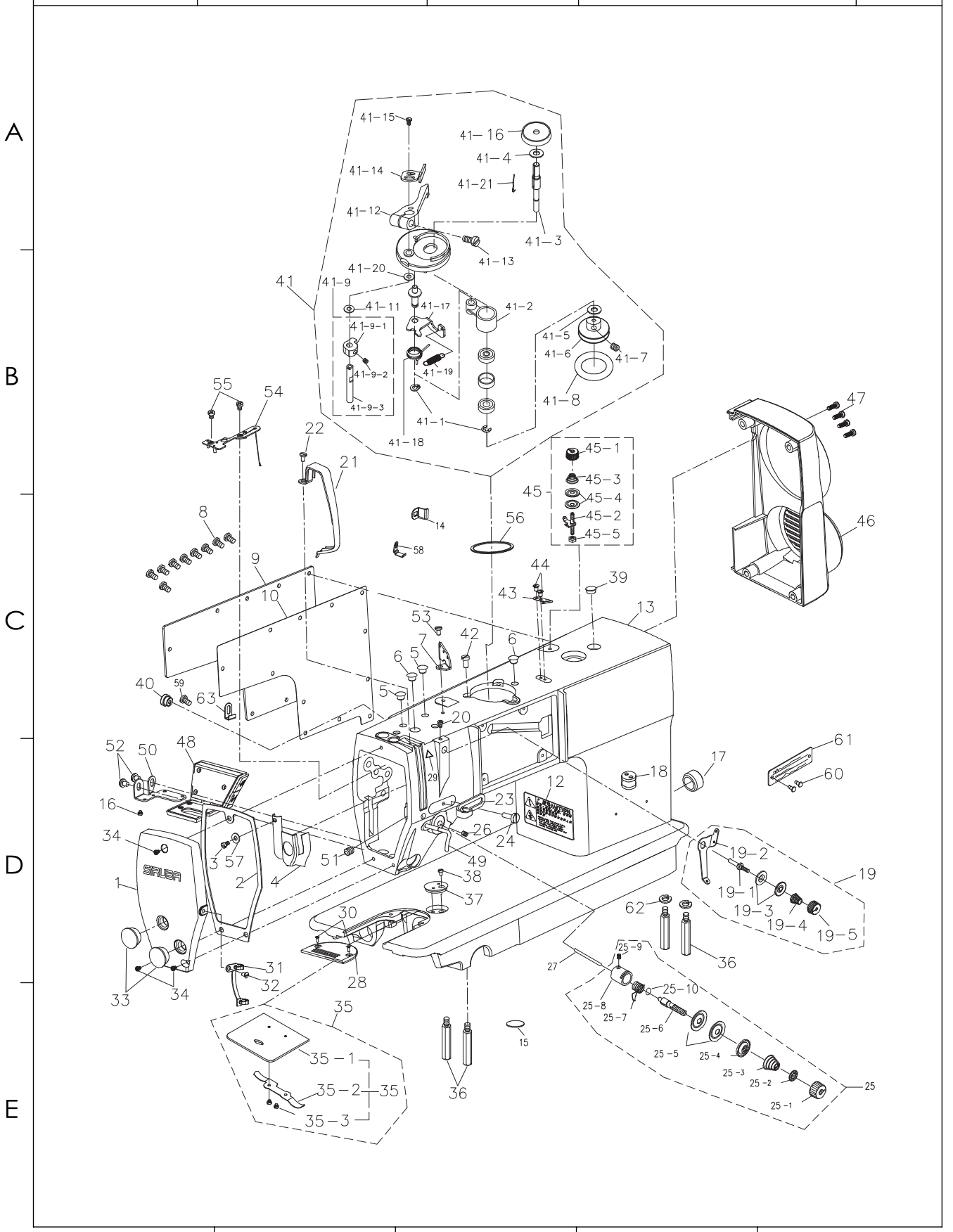

SIRUBA SEQUENCE LIST	Series	Parts Group	Subclass Remark	Page
	DL7200C	LA		1/3
				Date
				2020/12/28

序号 Ref.No.	新编号 new part No.	名 称 Part name	Name of parts	数量 Qty	备注 Note
1	7200C01001	面板	Face plate	1	
2	288C01002	面板垫	Face plate agsket	1	
3	S073184404	防油板螺钉	Screw 1/8×44 L=4	1	
4	280001004	面部防油板	Arm oil shield	1	
5	991001005	橡胶塞	Rubber plug	2	
6	991001006	针杆曲柄螺孔塞	Rubber plug	2	
7	991001007	三眼过线板	Thread guide rod	1	
8	S094762809	后窗板螺钉	Screw 3/16×28 L=9	9	
9	288001009E	后窗板	Side plate	1	
10	288001010E	后窗板垫	Gasker	1	
12	991001012	安全指示牌	Safety lable	1	
13	288001013EC	机壳组件	Machine cover	1	
14	730001014E	线夹	Clamp	1	
15	280001074	检验标示	Inspection sign	1	
16	M090300506	支架螺钉	Screw	4	
17	991001017	下轴盲孔塞	Rubber plug	1	
18	991001018	导线过线套(2孔)	Magnet cord rubber	1	
19	720001012T	小夹线器组件	Thread tension asm	1	
19-1	991001019-1	小夹线螺钉	Small clip line screw	1	
19-2	991001019-2	小夹线过线板	Thread tension guide	1	
19-3	991001019-3	小夹线板	Thread tension disk	2	
19-4	991001019-4	小夹线簧	Thread tension spring	1	
19-5	720001012T-5	小夹线螺母	Thread tension nut	1	
20	S114374006	小夹线组件支架螺钉	Screw	1	
21	720001038C	挑线防护罩	Thread take-up lever cover	1	
22	S094762806	挑线防护罩螺钉	Screw 3/16×28 L=6	1	
23	991001023	右线钩	Arm thread guide right	1	
24	S074374006	右线钩螺钉	Screw 11/64×40 L=6	1	
25	720001012C	夹线器组件	Thread tension asm	1	
25	720001012CH	夹线器组件（厚料）	Thread tension asm	1	
25-1	720001012C-1	夹线螺母	Tension nut	1	
25-2	991001025-2	夹线止动板	Rotating stopper	1	
25-3	991001025-3	夹线簧	Rotating stopper	1	
25-4	991001025-4	夹线压板	Thread tension disk presser	1	
25-5	991001025-5	夹线板	Thread tension disk	2	
25-6	991001025-6	夹线螺钉	Tension post	1	
25-7	991001025-7	挑线簧	Take-up spring	1	
25-7	991001025H-7	挑线簧（厚料）	Take-up spring	1	
25-8	991001025-8	调线簧调节座	Tension post socket	1	
25-9	S143574005	夹线螺丝紧固螺钉	Screw 9/64×40 L=5.5	1	
25-10	991001025-19	O型圈	O ring	1	
26	S115952811	夹线器支紧螺钉	Screw 15/64×28 L=7	1	
27	LA1137	松线钉	Tension releasing	1	
28	991001028	针板（薄料/4排牙）	Throat plate	1	
28	991001028D	针板（大针距/3排牙）	Throat plate	1	
28	030301022	针板 B2.6(大旋梭/3排牙)	Throat plate	1	

SiRUBA SEQUENCE LIST	Series	Parts Group	Subclass Remark	Page
	DL7200C	LA		2/3
				Date
				2020/12/28

	29	280001071	安全标示	Safety marking	1
	30	S044374006Z	针板螺钉	Screw 11/64×40 L=6	2
	31	280001031	左线勾	Arm thread guide left	1
	32	S074374006	左线勾螺钉	Screw 11/64×40 L=6	1
A	33	991001033	面板调节孔塞	Rubber plug	2
	34	S094762811	面板螺钉	Screw 3/16×28 L=8	3
	35	991001035	推板组件	Slide plate asm	1
	35	991001035D	推板组件（大旋梭）	Slide plate asm	1
	35-1	991001035-1	推板	Slide plate	1
	35-2	991001035-2	推板簧	Bed slide spring	1
	35-3	S082385602	推板簧螺钉	Screw 3/32×56 L=2.2	2
	36	991001036	底板支柱	Bed slide spring	4
	37	280001037	卷边器	Ruler stopper	1
	38	S074374006	卷边器螺钉	Screw 11/64×40 L=6	1
B	39	991001058	橡胶塞	Rubber plug	1
	40	288001063E	操作面板出线橡胶塞	Rubber plug	1
	41	280001041	绕线器组件	Winder assembly	1
	41-1	991001041-1	挡圈E4	Ring E4	2
	41-2	991001041-2	绕线轴基座	Bobbin base	1
	41-3	991001041-3	绕线轴	Spool	1
	41-4	991001041-4	O型圈P9	O ring	1
	41-5	991001041-5	平垫圈S6	Flat washer	1
	41-6	991001041-6	绕线轮	Winding wheel	1
	41-7	991001041-7	螺钉M5X5	Screw M5x5	2
C	41-8	991001041-8	橡皮垫圈29	Rubber washer	1
	41-9	991001041-9	梭芯夹凸轮组件	Shuttle cam asm.	1
	41-9-1	991001041-9-1	梭芯夹凸轮	Shuttle cam	1
	41-9-2	991001041-9-2	螺钉M5X5	Screw M5x5	1
	41-9-3	991001041-9-3	梭芯夹轴	Shuttle clamp shaft	1
	41-11	991001041-11	平垫圈S6	Flat washer	2
	41-12	991001041-12	梭芯压臂柄	Shuttle arm handle	1
	41-13	991001041-13	螺钉M4X12	Screw	1
	41-14	991001041-14	梭芯夹	Bobbin clip	1
	41-15	991001041-15	螺钉SM4.76	Screw	2
D	41-16	91001041-16	梭芯座	Bobbin base	1
	41-17	991001041-17	绕线杠杆	Winding lever	1
	41-18	991001041-18	弹簧	Spring	1
	41-19	991001041-19	弹簧	Spring	1
	41-20	991001041-20	O型密封圈S5	O type sealing ring	1
	41-21	991001041-21	卡簧	circlip	1
	42	M080500810	绕线器螺钉	Bobbin screw	3
	43	991001043	割线刀	Knife	1
	44	S093574005	割线刀螺钉	Knife screw	2
	45	720001046	绕线夹线器组件	Thread tension asm.	1
E	45-1	280001045-1	夹线螺母	Tension nut	1
	45-2	991001045-2	夹线螺钉	Tension post	1
	45-3	991001045-3	夹线弹簧	Tension spring	1
	45-4	991001045-4	夹线板	Thread tension disk presser	2
	45-5	991001045-6	夹线螺母（下）	Tension nut	1

1 2 3 4 5

SIRUBA SEQUENCE LIST	Series	Parts Group	Subclass Remark	Page
	DL7200C	LA		3/3
				Date
				2020/12/28

46	288C01010G	电机罩壳	Motor housing	1	
47	M180500820	螺钉	Screw	4	
48	288001048E	倒缝灯开关组件	Reverse seam lamp switch assembly	1	
49	280001049	大线勾	Presser bar thread guide	1	
50	280001050	倒缝灯开关支架	Switch support for reverse seam lamp	1	
51	S153574006	大线勾紧定螺钉	Screw	1	
52	S094762806	倒缝灯开关固定螺钉	Screw	1	
53	S074374007	三眼线勾螺钉	Screw	1	
54	991001052	油线板组件	Oil plate assembly	1	
55	S093574016	油线板固定螺钉	Screw	2	
56	991001056	绕线器垫片	Bobbin Washer	1	
57	600011037	防油板垫片	Grease plate gasket	1	
58	730001058E	线夹1	Wire clip 1	1	
59	S094762806	线夹螺钉	Screw	1	
60	991001039	铆钉	Pole	2	
61	7200C01061	型号牌	Modle plate	1	
62	W230651004	弹簧垫片	Spring washer	2	
63	280001066-1	线夹	Plastic clip	1	

SiRUBA PARTS LIST	Series	Parts Group	Subclass Remark	Page
	DL7200C	LB		1 / 1
				Date
				2020/12/28

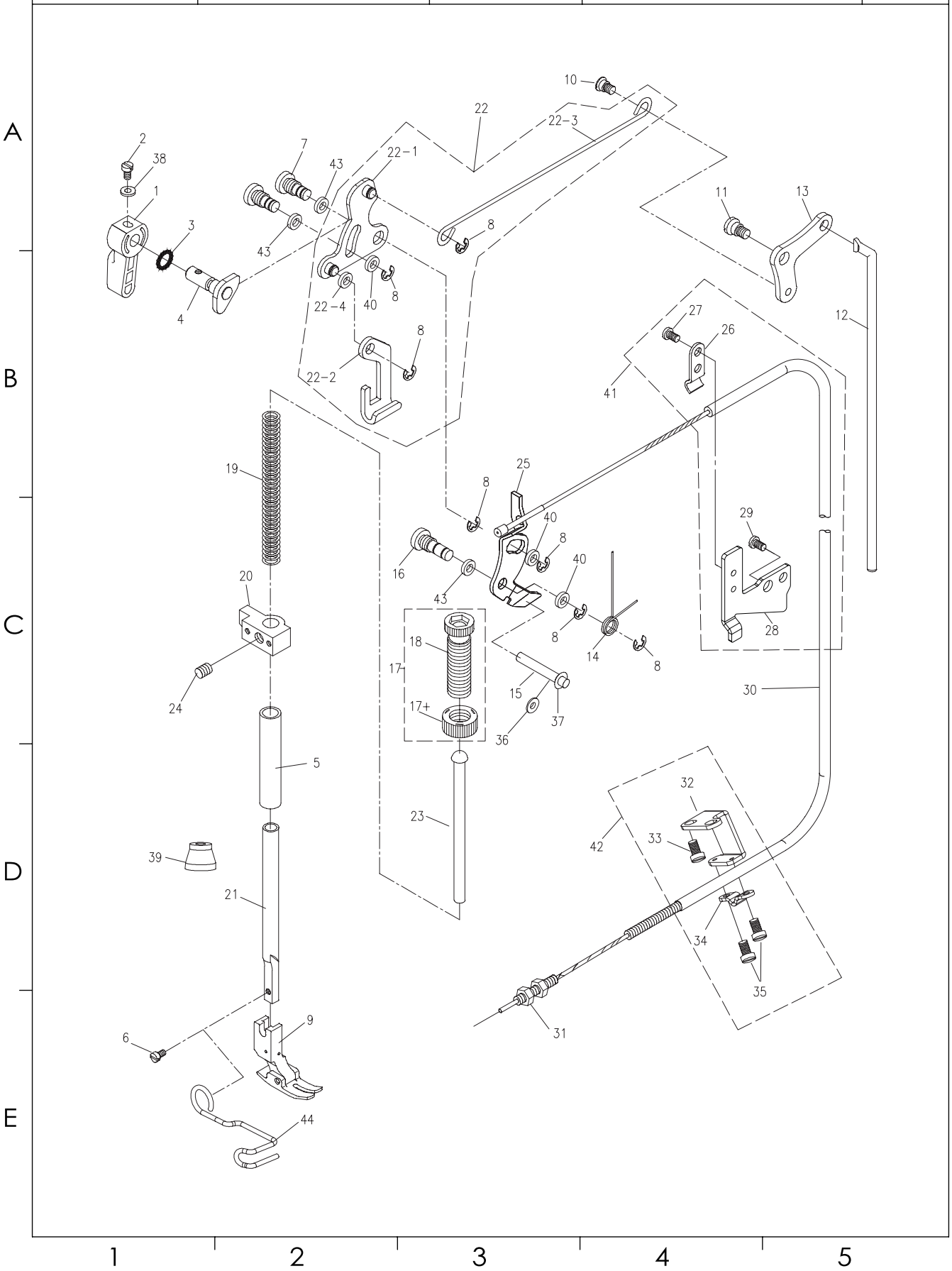

SIRUBA SEQUENCE LIST	Series	Parts Group	Subclass Remark	Page
	DL7200C	LB		1/2
				Date
				2021/02/26

序号 Ref.No.	新编号 new part No.	名 称 Part name	Name of parts	数量 Qty	备注 Note
1	720003010	压脚扳手	Hand lifter	1	
2	991004002	压脚扳手螺钉	Screw 9/64×40 L=10	1	
3	991004003	压脚扳手轴O型圈	Rubber ring	1	
4	LB1112	压脚扳手凸轮部件	hand lifter cam asm	1	
5	991004005	压杆轴套	Presser bar bushing lower	1	
6	S073574011	压脚螺钉	Screw 9/64×40 L=11	1	
7	991004007	前杠杆螺纹销	Link shaft	2	
8	991004008	卡簧	E-ring 5	7	
9	991004009	压脚部件	Presser foot asm	1	
9	991004009H	压脚部件(厚料)	Presser foot asm	1	
10	991004010	抬压脚拉杆螺钉	Hinge screw	1	
11	991004011	后杠杆轴拉螺钉	Hinge screw	1	
12	991004012	抬压脚顶杆	Knee lifter connecting rod	1	
13	991004013	抬压脚后杠杆	Lifting lever link	1	
13	991004013-H	抬压脚后杠杆（厚料）	Lifting lever link(Thick material)	1	
14	991004022	松线顶板复位簧	Tension release return spring	1	
14	991004022H	松线顶板复位簧(厚料)	Reset spring of loose thread roof (thick material)	1	
15	991001027	松线辅钉	Tension release supporting pin	1	
16	991004026	松线顶板螺纹销	Tension release shaft	1	
17	720003025C	调压螺钉 组件	Presser adjurting screw nut	1	
17	720003037CH	调压螺钉 组件（厚料）	Presser adjurting screw nut	1	
17+	720003025C-2	调压螺母	Presser adjurting screw nut H	1	
18	720003025C-1	调压螺钉	Presser spring regulator	1	
18	720003025CH-1	调压螺钉（厚料）	Presser spring regulator H	1	
19	991004029	调压簧	Presser adjurting spring	1	
19	870004004	调压簧（厚料）	Presser adjurting spring H	1	
20	280004006	压杆导架	Presser bar guide bracket	1	
21	991004031	压杆	Presser bar	1	
22	281004019	前杠杆组件	Knee lifting cross rod asm	1	
22-1	991004032-1	抬压脚前杠杆	Hand lifter link	1	
22-2	991004032-2	压脚升降板	Lifting lever	1	
22-3	180004022	抬压脚拉杆	Knee lifting cross rod	1	
22-4	280004019-4	垫圈	Washer	1	
23	991004033	调压导杆	Presser guide bar	1	
24	S126354006	导架螺钉	Screw	1	
25	991004025	松线顶板	Thread tension relerse wire	1	
26	991004017	拉线压板	Stay plate	1	
27	S073574007	上压板紧固螺钉	Screw 9/64×40 L=7	1	
28	720004028C	上压线底板	Wire holder bracket upper	1	
29	7200C10009	上压板组件紧固螺钉	Screw 3/16×28 L=6	1	
30	991004034	拉线（长）	Pull line(long)	1	
30	991004034-D	拉线（短）	Pull line(short)	1	
31	991004020	拉线调节螺母	Nut 3/16×32	2	
32	991004023	松线钢绳下支架	Lower bracket	1	
33	S095952810	下支架紧固螺钉	Screw 15/64×28 L=10	2	
34	991004021	下拉线压板	Down stay plate	1	
35	S073574014	下压板紧固螺钉	Screw 9/64×40 L=7	2	

SiRUBA SEQUENCE LIST	Series	Parts Group	Subclass Remark	Page
	DL7200C	LB		2/2
				Date
				2020/12/28

36	870003033	挡油垫	Oil retaining pad	1	
37	930001065	卡簧	Reed spring	1	
38	991004042	垫片	Shim	1	
39	991004041	挡油帽	Oil retaining cap	1	
40	991002036	垫片	Shim	3	
40	991002036H	垫片	Shim	3	
41	991004037	上支架组件	Subassembly	1	
42	991004038	下支架组件	Lower bracket assembly	1	
43	991004039-1	红纸垫	Rubber gasket	3	
44	991004036	压脚保护架	Presser foot protection frame	1	

A B C D E

1 2 3 4 5

SiRUBA PARTS LIST	Series	Parts Group	Subclass Remark	Page
	DL7200C	LD		1 / 1
				Date
				2020/12/28

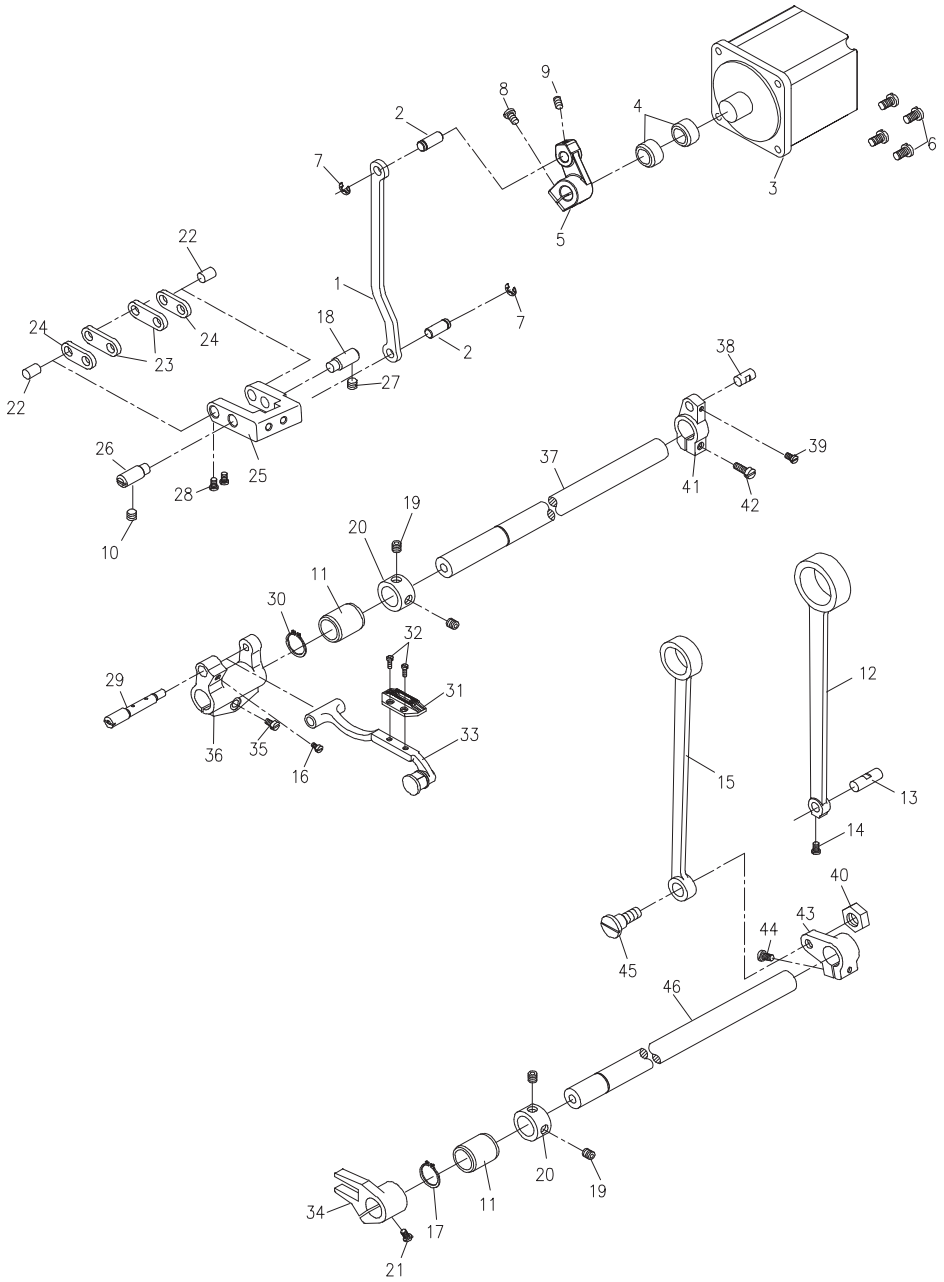

SiRUBA SEQUENCE LIST	Series	Parts Group	Subclass Remark	Page
	DL7200C	LD		1/1
				Date
				2020/12/28

序号 Ref.No.	新编号 new part No.	名 称 Part name	Name of parts	数量 Qty	备注 Note
1	288004003	倒送料连杆	Feed adjust rod	1	
2	288004002	倒送料连杆销	Feed regulator pin	2	
3	288005003EQX	倒缝步进电机	Reverse stepping motor	1	
4	288004041	油封	Oil seal	2	
5	288E05019	倒缝操纵杆曲柄	Reverse lever crank	1	
6	M180400714	螺钉	Screw	4	
7	288004040	卡簧	E-ring	2	
8	M180500822	螺钉	Screw	1	
9	S144374006	螺钉SM11/64″X40	Screw 11/64×40	1	
10	991005065	左销螺钉	Screw	1	
11	991005049	送布、抬牙轴前轴套	Feed rocker shaft bushing	2	
12	991005012	送料连杆	Rocker shaft connecting rod	1	
13	991005013	送料连杆销	Walking foot long pin	1	
14	S073574005	送料连杆销螺钉 9/64×40	Screw 9/64×40	1	
15	991005015	抬牙连杆	Connecting rod	1	
16	S084374007	牙架销螺钉 11/64×40	Screw 11/64×40	1	
17	991005030	轴用卡簧	Retaining ring	1	
18	991005059	摆动轴板座右销	Adjusting link fulcrum shaft	1	
19	S126354004	抬牙轴挡圈螺钉 1/4x40	Screw 1/4x40	4	
20	991002015	挡圈	Thrust collar	2	
21	S084374012	抬牙叉螺钉 11/64×40	Screw 11/64×40	1	
22	991005022	短摆动板连接销	Walking foot short pin	2	
23	991005023	长摆动板	Connecting link long pin	2	
24	991005024	短摆动板	Connecting link short pin	2	
25	288E04011	摆动座	Feed adjust link asm	1	
26	991005026	摆动板座左销	Adjusting link fulcrum shaft	1	
27	991002001	右销螺钉15/64×28(2-32)	Screw 15/64×28	1	
28	S123574005	连杆销螺钉 9/64×40	Screw 9/64×40	2	
29	991005029	牙架偏心销	Feed bar shaft	1	
30	991005030	轴用卡簧	Retaining ring	1	
31	D1711D	送布牙(厚料/3排牙)	Feed dog	1	
31	991005031D	送布牙 (大针距/3排牙)	Feed dog	1	
31	030304001	送布牙(大旋梭/3排牙)	Feed dog	1	
32	S073184406	送布牙螺钉 1/8×44	Screw 1/8×44	2	
33	991005033	牙架部件	Feed bar asm	1	
33	991005033D	牙架部件(大旋梭)	Feed bar asm	1	
34	991005054	抬牙叉	Driving shaft crank asm.	1	
35	S074762812	牙架座螺钉 3/16×28	Screw 3/16×28	1	
36	991005052	牙架座（牙架曲柄）	Feed bar crank asm.	1	
37	991005037	送布轴	Feed rocker shaft	1	
38	991005038	送布曲柄销	Walking foot middle pin	1	
39	S073574006	曲柄销螺钉 9/64×40	Screw 9/64×40	1	
40	N217142805	抬牙连杆轴位螺母	Nut	1	
41	991005041	送布曲柄	Feed rocker shaft crank	1	
41	991005041D	送布曲柄（大针距15mm）	Feed rocker shaft crank	1	
42	S074762815	送布曲柄螺钉 3/16×28	Screw 3/16×28	1	
43	991005043	抬牙后曲柄	Lifting rocker asm.	1	
44	S074762815	抬牙后曲柄螺钉 3/16×28	Screw 3/16×28	1	
45	991005045	抬牙连杆轴位螺钉	Hinge screw	1	
46	991005046	抬牙轴	Feed driving shaft	1	

SIRUBA PARTS LIST	Series	Parts Group	Subclass Remark	Page
	DL7200C	LE		1 / 1
				Date
				2020/12/28

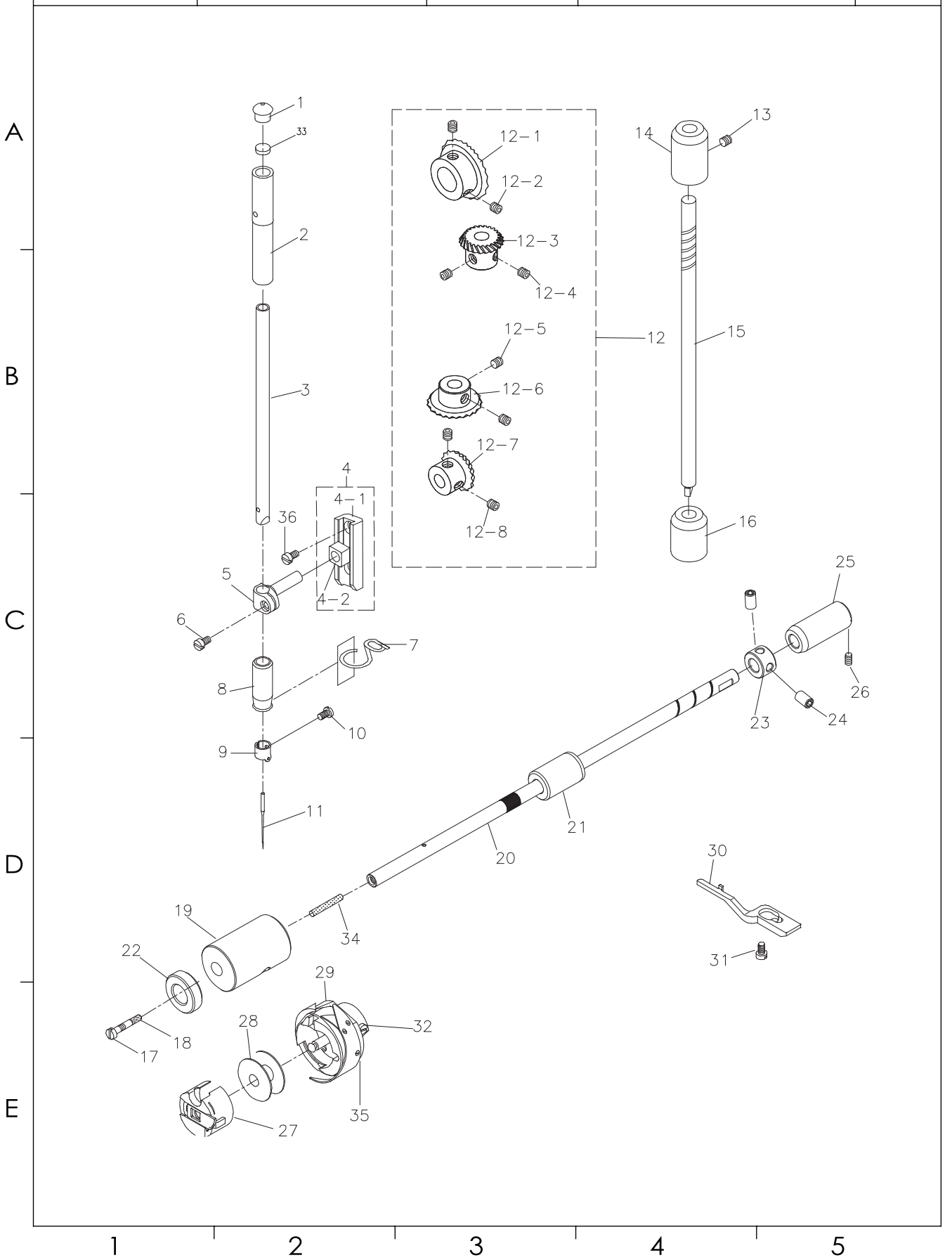

SiRUBA SEQUENCE LIST	Series	Parts Group	Subclass Remark	Page
	DL7200C	LE		1/2
				Date
				2020/12/28

序号 Ref.No.	新编号 new part No.	名 称 Part name	Name of parts	数量 Qty	备注 Note
1	991003001	针杆上孔塞	Upper Cap	1	
2	991003002	针杆上套	Needle bar bushing upper	1	
3	991003003	针杆	Needle bar	1	
3	991003003H	针杆(厚料)	Needle bar (heavy duty)	1	
4	991003032A	针杆滑块座组件	Slide block	1	
4-1	991003032	针杆连接柱滑块座	Slide block base	1	
4-2	991003006	针杆连接柱滑块	Slide block	1	
5	991003004	针杆连接柱	Needle rod holder asm.	1	
6	S073574007	针杆连接柱螺钉	Screw 9/64×40 L=7.5	1	
7	991003007	针杆下套线钩	Needle bar thread guide	1	
8	991003008	针杆下套	Needle bar bushing lower	1	
8	991003008H	针杆下套（大旋梭）	Needle bar bushing lower	1	
9	991003010	针杆过线环	Needle bar thread guide	1	
9	030302025	针杆过线环(9911机型)	Needle bar thread guide	1	
10	S083184405	机针螺钉	Screw 1/8×44 L=4.8	1	
11	991014011	机针 DBx5 14#	Needle DBx1 #14	1	
11	991003011H-5	机针 DPx5 20#	Needle DPx5 #20	1	
12	991003012	伞齿轮组件	Gear pinion asm.	1	
12-1	991003014	上轴伞齿轮	Gear asm.	1	
12-2	S116354008	伞齿轮螺钉	Screw 1/4×40 L=8	2	
12-3	991003016	竖轴上伞齿轮	Pinion asm.	1	
12-4	S116354008	伞齿轮螺钉	Screw 1/4×40 L=8	2	
12-5	S116354008	伞齿轮螺钉	Screw 1/4×40 L=8	2	
12-6	991003019	竖轴下齿轮	Gear asm.	1	
12-7	991003021	下轴伞齿轮	Pinion asm.	1	
12-8	S116352808	伞齿轮螺钉	Screw	2	
13	S145952806	竖轴上套紧固螺钉	Screw	1	
14	991003016-1	竖轴上轴套	Upright shaft bushing,lower	1	
15	991003014-1	竖轴	Upright shaft	1	
16	991003017	竖轴下轴套	Upright shaft bushing,lower	1	
17	991003028	下轴限油螺钉	Oil seal screw	1	
18	991003027	下轴限油芯	Oil wick	1	
19	991003026	下轴前轴套	Lower shaft front metal	1	
19	991105012	下轴前轴套（9911机型）	Lower shaft front metal	1	
20	991003022	下轴	Lower shaft	1	
20	991107001	下轴(9911机型）	Lower shaft	1	
21	991006047	下轴中套	Lower axle sleeve	1	
22	030306031	下轴左套油封	Oil Seal	1	
23	991003020	下轴挡圈	Thrust collar asm.	1	
24	S074374005	下轴挡圈螺钉	Screw 11/64×40 L=5	2	
25	991003018	下轴后轴套	Bushing rear	1	
26	S145952806	下轴后轴套螺钉	Screw	1	
27	991003030	梭壳	Bobbin case	1	
27	030306010	梭壳（配9911）	Bobbin case	1	
28	991003029	梭芯	Bobbin	1	
28	030306011	梭芯（配9911）	Bobbin	1	

SiRUBA SEQUENCE LIST	Series	Parts Group	Subclass Remark	Page
	DL7200C	LE		2/2
				Date
				2020/12/28

29	991003015	旋梭	Hook asm.	1	
29	030306012	大旋梭(9911机型)	Big Hook asm.	1	
30	991003023	旋梭定位勾	Bobbin case holder	1	
30	030306026	旋梭定位勾(9911机型)	Bobbin case holder	1	
31	S084374011	旋梭定位勾螺钉	Screw SM11/64×40 L=11	1	
32	991003032	旋梭螺钉	Screw	2	
33	280003036	针杆油毡	Needle bar linoleum	1	
34	LL1122	油芯	Oil core	1	
35	991003037	螺钉	Screw	1	
36	S074374008	滑块座螺钉	Screw SM11/64×40 L=8	2	

SiRUBA PARTS LIST	Series	Parts Group	Subclass Remark	Page
	DL7200C	LH		1 / 1
				Date
				2020/12/28

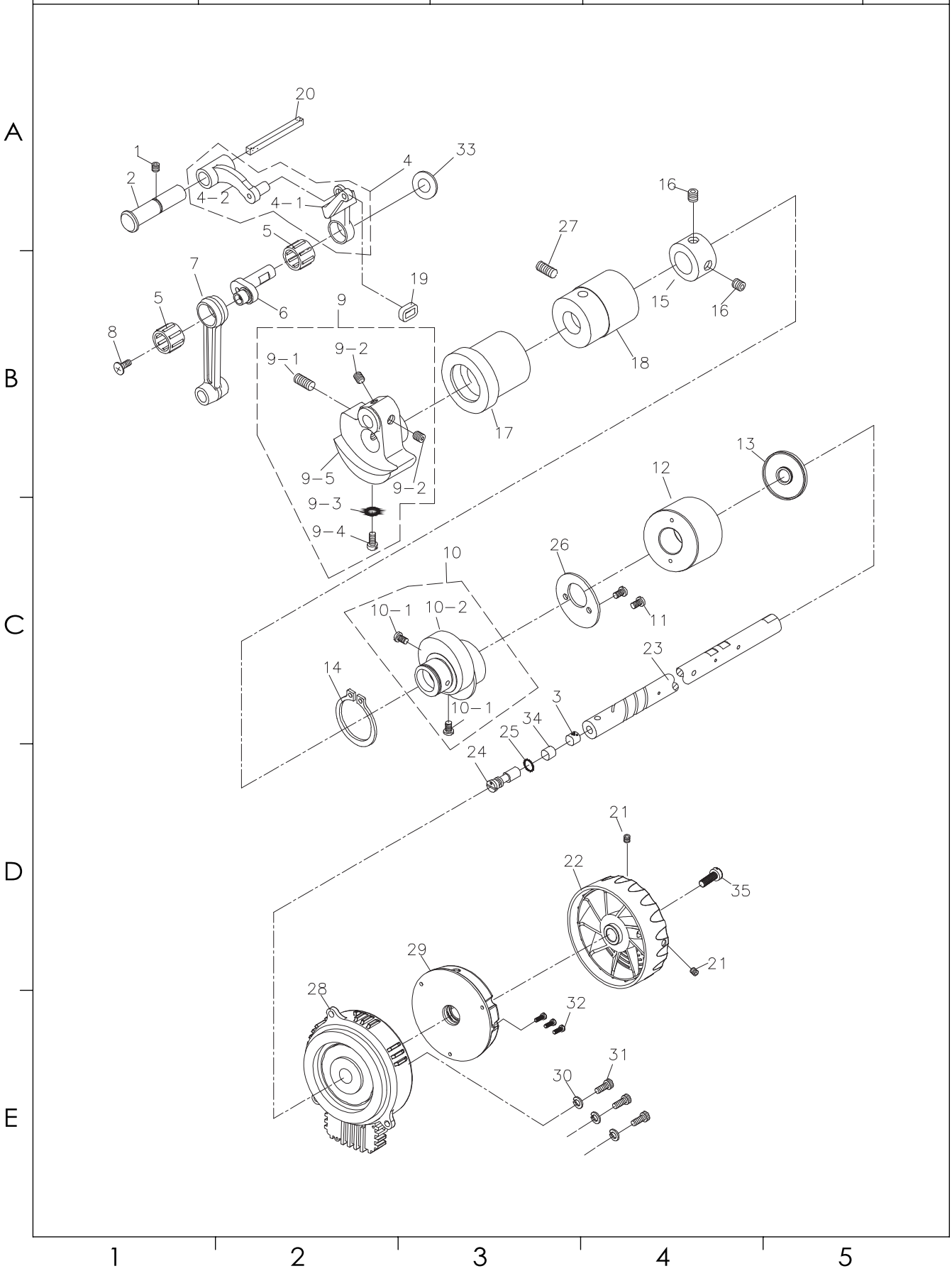

SIRUBA SEQUENCE LIST	Series	Parts Group	Subclass Remark	Page
	DL7200C	LH		1 / 1
				Date
				2020/12/28

序号 Ref.No.	新编号 new part No.	名 称 Part name	Name of parts	数量 Qty	备注 Note
1	991002001	挑线连杆销螺钉	Screw 15/64×28 L=10.5	1	
2	991002002	挑线连杆销	thread take-up crank shaft	1	
3	280003036	曲柄油量限制毡	Roller felt	1	
4	991002004	挑线连杆组件	thread take-up lever asm	1	
4	991002004H	挑线连杆组件（厚料）	thread take-up lever asm (heavy duty)	1	
4-1	991002004-1	挑线杆	take-up lever	1	
4-2	991002004-2	挑线连杆	Pick line connecting rod	1	
4-2	991002004-2D	挑线连杆	Pick line connecting rod	1	
5	991002005	挑线杆滚针轴承	Needle bearing	2	
6	991002006	挑线曲柄	Needle bar crank	1	
6	991002007H	挑线曲柄(厚料)	Needle bar crank (heavy duty)	1	
7	991002007	针杆连杆	Needle bar crank rod	1	
8	991002008	挑线曲柄左旋螺钉	Left screw 9/64×40 L=4.8	1	
9	991002009	针杆曲柄组件	Needle bar crank asm	1	
9	991102009H	针杆曲柄组件(厚料)	Needle bar crank asm (heavy duty)	1	
9-1	S127142816	针杆曲柄紧固螺钉	Screw 9/32×28 L=16	1	
9-2	S116354006	挑线曲柄定位螺钉	Screw 1/4×40 L=6	2	
9-3	991002009-3	定位螺丝O型圈	Rubber O ring	1	
9-4	S077142815	针杆曲柄定位螺钉	Screw 9/32×28 L=15.5	1	
9-5	991002009-5	针杆曲柄	Needle bar crank	1	
10	991002010	送料偏心轮组件	Feed drive eccentric cam asm.	1	
10-1	S076354011	送料偏心轮螺钉	Screw 1/4×40 L=11	2	
10-2	991002010-2	送料偏心轮	Feed drive eccentric cam	1	
11	S093574006	送料偏心轮盖板螺钉	Screw 9/64×40 L=6	2	
12	991002012	上轴后套	Mainshaft back bush	1	
13	991002013	上轴后套油封	Oil seal of mainshaft back bush	1	
14	991002014	卡簧	Snap ring	1	
15	991002015	上轴挡圈	Thrust collar asm	1	
16	S116354006	上轴挡圈螺钉	Screw 1/4x40 L=6	2	
17	991002017	上轴前轴套	Main shaft front bushing asm.	1	
18	870002008	上轴中轴套	Bushing intermediate	1	
19	991002019	挑线杆橡皮套	Rubber	1	
20	991009008	挑线连杆销供油线	Thread take-up crank shaft felt	1	
21	M140500806	手轮螺钉	Screw	2	
22	288C02019G	手轮	Hand wheel	1	
23	288002010	上轴	Main shaft, upper	1	
24	991002024	上轴油量调节销	Oil amount adjusting pin	1	
25	991002025	上轴油量调节销O型圈	Rubber ring	1	
26	991002026	送料偏心轮盖板	Thrust collar	1	
27	S145952806	上轴中轴套螺钉	Screw	1	
28	288002028EQX	电机	Servo Motor Assy.	1	
29	288002029EQX	编码器	Film Rotating And Encoder Assy.	1	
30	280002014	弹性垫圈	Washer	3	
31	M180500814	螺钉 M5*14	Screw	3	
32	M070300505	螺钉 M3*5	Screw	3	
33	W220801605	垫片	Washer	1	
33	W220801605-1	垫片	Washer	1	
34	870002013	油量销套	Oil throttle	1	
35	S078732811	螺钉	Screw	1	

SiRUBA PARTS LIST	Series	Parts Group	Subclass Remark	Page
	DL7200C	LL		1 / 2
				Date
				2020/12/28

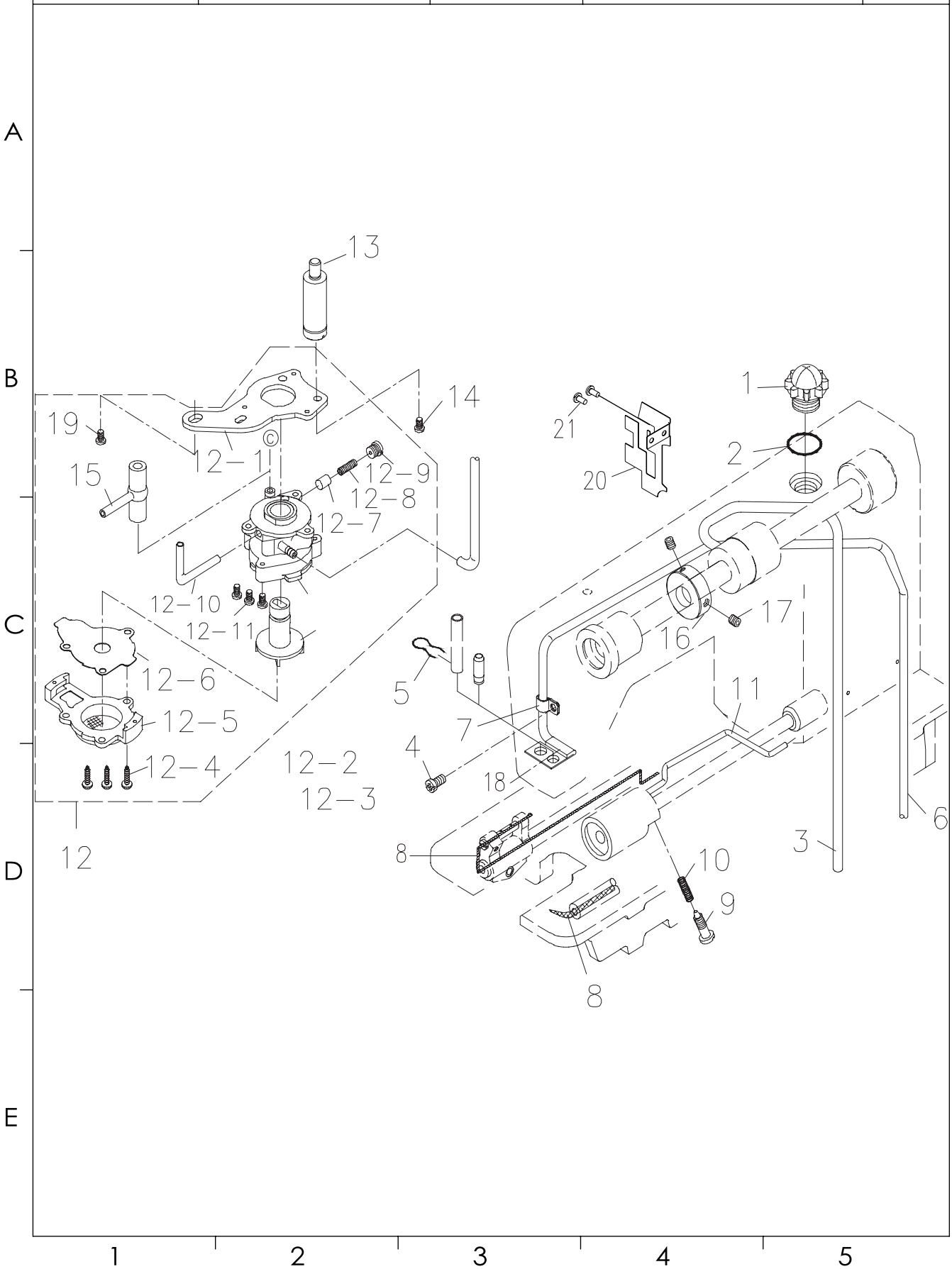

SIRUBA SEQUENCE LIST	Series	Parts Group	Subclass Remark	Page
	DL7200C	LL		1 / 2
				Date
				2021/02/26

序号 Ref. No.	新编号 new part No.	名 称 Part name	Name of parts	数量 Qty	备注 Note
1	991009001	油窗	Oil sight window	1	
2	991009002	油窗O型圈	Rubber ring	1	
3	7200C09003	上轴供油管B	Main shaft oil tube B	1	
4	S094762806	回油管夹螺钉	Screw 3/16x28 L=6	1	
5	991009005	回油毡夹	Oil felt presser	1	
6	991009006	回油管	Oil return tube asm	1	
7	991009007	回油管夹	Holder	1	
8	991009008	送料轴油线	Oil wick	2	
9	991009009	旋梭油量调节螺钉	Oil adjusting screw	1	
10	991009010	旋梭油量调节簧	Spring	1	
11	288008011EP	旋梭供油管	Oil tube	1	
12	991009012	油泵部件	Lubricating oil pump asm	1	
12-1	991009012-1	油泵安装板	Oil pump installing base	1	
12-2	991009012-2	油泵体	Oil pump	1	
12-3	991009012-3	油泵叶轮	Oil pump impeller	1	
12-4	991009012-4	油泵盖螺钉	Screw	3	
12-5	991009012-5	油泵盖	Lubricating oil pump cover	1	
12-6	991009012-6	油泵叶轮托板	Oil pump impeller cover	1	
12-7	991009012-7	回油柱塞	Plunger	1	
12-8	991009012-8	柱塞簧	Plunger spring	1	
12-9	991009012-9	柱塞螺钉	Plunger screw	1	
12-10	991009012-10	下轴供油管	Hook driving shaft oil tube	1	
12-11	M070300508	油泵安装螺钉	Screw M3 L=8	3	
13	991009013	油泵连接螺柱	Oil pump support, large	1	
14	S074374010	油泵螺钉	Screw	1	
15	991009015	供油管接头	Rubber joint	1	
16	991009016	绕线器驱动轮	Bobbin pulley	1	
17	S144374006	绕线器驱动轮螺钉	Screw	2	
18	991009019	油毡	Asphalt felt	1	
19	ZSD15005	油泵螺钉	Screw 15/64x28 L=10	1	
20	720009018	挡板	Baffle	1	
20	7200C08020	挡板	Baffle	1	
21	180006021	挡板螺钉	Screw	1	

SiRUBA PARTS LIST	Series	Parts Group	Subclass Remark	Page
	DL7200C	LL		2 / 2
				Date
				2020/12/28

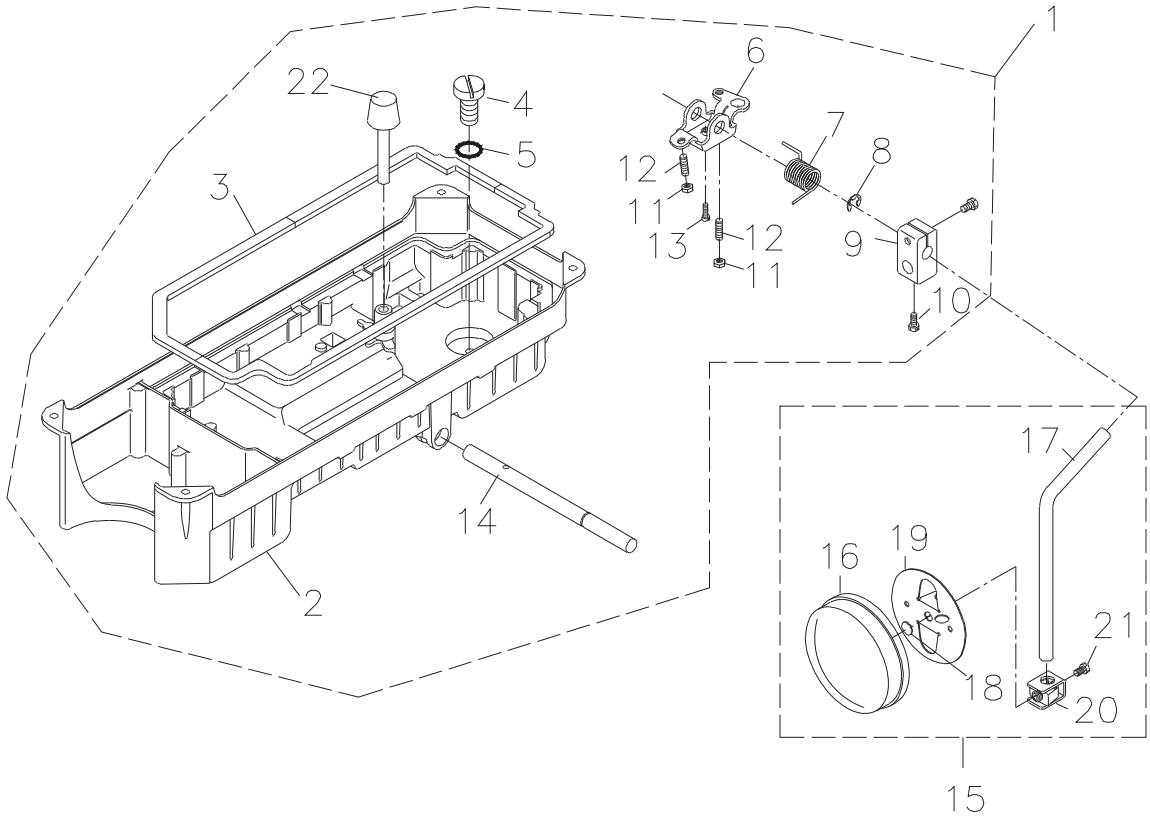

SIRUBA SEQUENCE LIST	Series	Parts Group	Subclass Remark	Page
	DL7200C	LL		2/2
				Date
				2020/12/28

序号 Ref.No.	新编号 new part No.	名 称 Part name	Name of parts	数量 Qty	备注 Note
1	991010001	油盘部件	Oil reservoir asm	1	
2	991010002	油盘	Oil reservoir	1	
3	991010003	油盘垫	Oil reservoir gasket	1	
4	S077942407	排油孔螺钉	Screw 5/16x24 L=7	1	
5	991010005	排油孔螺钉O型圈	Rubber ring	1	
6	991010006	抬压脚双向曲柄	Knee lifting rotating arm	1	
7	991010007	双向曲柄扭簧	Spring	1	
8	991010008	抬压脚轴开口挡圈	E-ring	1	
9	991010009	抬压脚操纵杆接头	Vertical shaft fitting arm	1	
10	991010010	操纵杆接头螺钉	Screw	2	
11	N210601006	双向曲柄限位调节螺母	Nut M6	2	
12	M120601030	双向曲柄限位调节螺钉	Screw M6 L=30	2	
13	M190601018	双向曲柄螺钉	Screw M6 L=17.5	1	
14	991010014	抬压脚轴	Knee press cross shaft	1	
15	991010015	操纵杆部件	Knee pan plate asm	1	
16	991010016	操纵杆软垫	Knee pan plate cover	1	
17	991010017	操纵杆	Knee pan upright shaft	1	
18	991010018	操纵杆垫	Knee pan plate rubber	1	
19	991010019	操纵板	Knee pan plate	1	
20	991010020	操纵杆接头	Knee pan plate support	1	
21	M190601012	接头螺钉	Screw M6 L=12	1	
22	991010022	抬压脚顶杆	Knee lifter push rod	1	

SiRUBA PARTS LIST	Series	Parts Group	Subclass Remark	Page
	DL7200C	LU		1 / 3
				Date
				2020/12/28

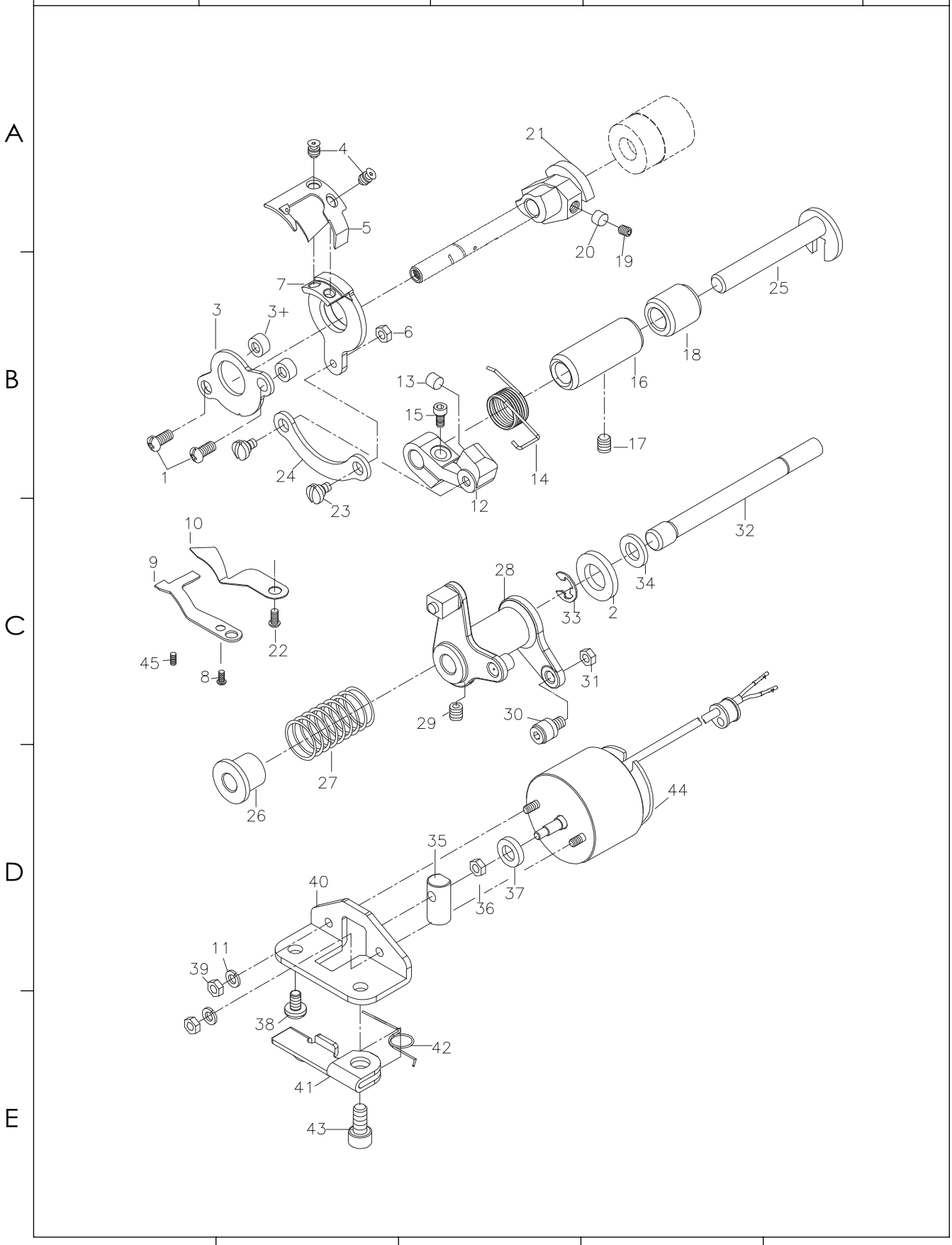

SIRUBA SEQUENCE LIST	Series	Parts Group	Subclass Remark	Page
	DL7200C	LU		1 / 3
				Date
				2020/12/28

序号 Ref. No.	新编号 new part No.	名 称 Part name	Name of parts	数量 Qty	备注 Note
1	S094374012	螺钉ll/64”x40 L=12	Screw SM1l/64x40 L=12	2	
2	991006049	电磁铁垫片	Washer	1	
3	991006003	刀架压板	Partiality shank	1	
3+	991006003+	刀架压板垫圈	Partiality shank washer	2	
4	991006004	动刀固定螺钉	Screw	2	
5	991006005	动刀	Motorial knife	1	
5	991006005H-1	动刀（厚料）	Motorial knife (heavy duty)	1	
5	991006005D	动刀（大旋梭）	Motorial knife (big hook)	1	
6	991006006	螺母SMll/64”x40	Nut SM11/64x40	1	
7	991006007	动刀架	Knife bracket	1	
7	991110008	动刀架（9911机型）	Knife bracket	1	
8	S043574006	定刀调节螺钉	Screw	1	
9	LU1711	固定刀	Secant knife	1	
9	991006009D	固定刀（大旋梭）	Secant knife(big hook)	1	
10	991006010	分线片	Protect needle patch	1	
11	991006048	垫圈4.5x8x0.5	Washer 4.5x8x0.5	2	
12	991006012	切刀驱动曲柄	Thread shear rock arm	1	
13	991006013	驱动曲柄止动块	Positioning block	1	
14	991006014	弹簧	Spring	1	
15	S094763214	螺钉SM,3/16”x32 L=14	Screw SM3/16x32 L=14	1	
16	991006016	切线轴套	Axle sleeve	1	
17	S125952806	螺钉	Screw SM15/64x28 L=6	1	
18	991006018	驱动曲柄轴衬套	Short bush	1	
19	S156354010	螺钉SMl/4”x40 1=10	Screw SM1/4x40 L=10	2	
20	991006020	切线凸轮垫	Pole	2	
21	991006021	凸轮	Thread shear cam	1	
22	S073574006	螺钉SM9/64”x40 L=5	Screw SM9/64x40 L=6	1	
23	991006023	连杆螺钉	Screw	2	
24	991006024	连杆	Knife shaft connecting rod	1	
25	991006025	切刀驱动曲柄轴	Cutter crank shaft	1	
26	991006026	扭簧端盖	Spring cover	1	
27	991006027	切线凸轮复位弹簧	Spring	1	
28	991006028	切线凸轮曲柄组件	Thread shear rock arm shaft	1	
29	S116354006	螺钉SMll/64”x40	Screw	1	
30	991006030	滚柱	Rool shaft assy	1	
31	991006031	螺母	Nut	1	
32	991006032	切刀驱动轴	Thread shear shaft	1	
33	991006033	卡簧E6	Retaining ring	1	
34	991006034	电磁铁缓冲垫	Magnetic plug cushion mat	1	
35	991006035	切线电磁铁顶销	Magnetic plug pin	1	
36	991006036	螺母SMl/4”x40	Nut SM1/4x40	1	
37	991006037	垫圈	Washer	1	
38	S075952810C	螺钉	Screw	1	
39	991006039	螺母M4	Nut M4	2	
40	991006040	切线电磁铁支架	Magnetic plug cushion mat	1	
41	991006041	松线座	Thread loose seat	1	
42	991006042	弹簧	Spring	1	
43	991006043	螺钉	Screw	1	
44	288E06043	剪线电磁铁组件	Magnetic solenoid asm	1	
45	S123574014	定刀调节螺钉	Screw	1	

SiRUBA PARTS LIST	Series	Parts Group	Subclass Remark	Page
	DL7200C	LU		2 / 3
				Date
				2020/12/28

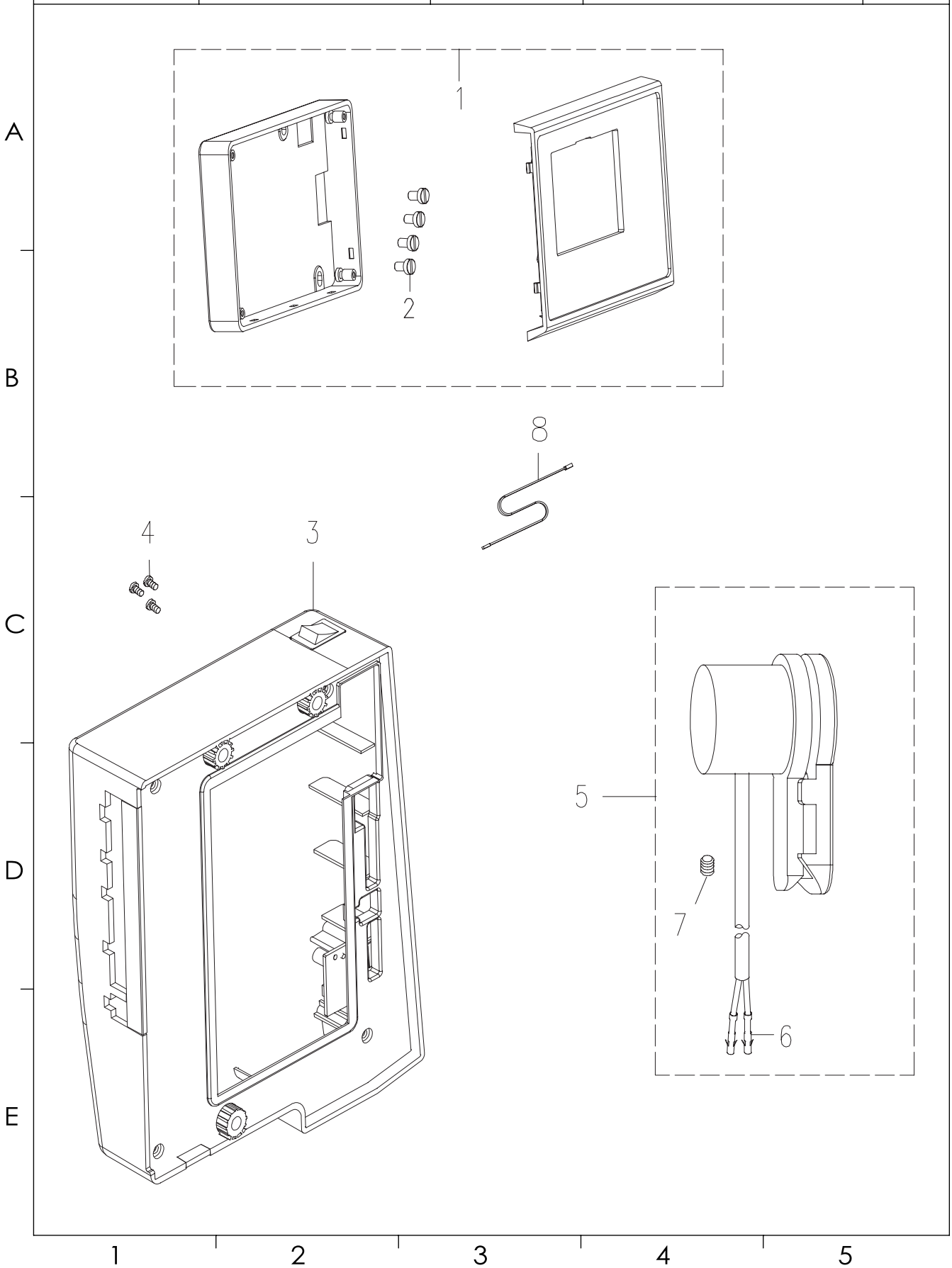

SIRUBA SEQUENCE LIST	Series	Parts Group	Subclass Remark	Page
	DL7200C	LU		2/3
				Date
				2020/12/28

序号 Ref.No.	新编号 new part No.	名 称 Part name	Name of parts	数量 Qty	备注 Note
1	288007001EQXC	控制面板组件	Needle selection box asm.	1	
2	S073574008	螺钉	Screw	4	
3	288007003EQXC	电控组件	Electronic control module	1	
4	S074762820	螺钉	Screw	3	
5	288007006E	电子夹线器组件	Electroni conductor holder asm.	1	
6	991008006	插针	Contact pin	2	
7	S144762805	电子夹线器固定螺钉	Screw 3/16X28	1	
8	288007008E	信号连接线	Signal Connecting line	1	

SiRUBA PARTS LIST	Series	Parts Group	Subclass Remark	Page
	DL7200C	LU		3 / 3
				Date
				2020/12/28

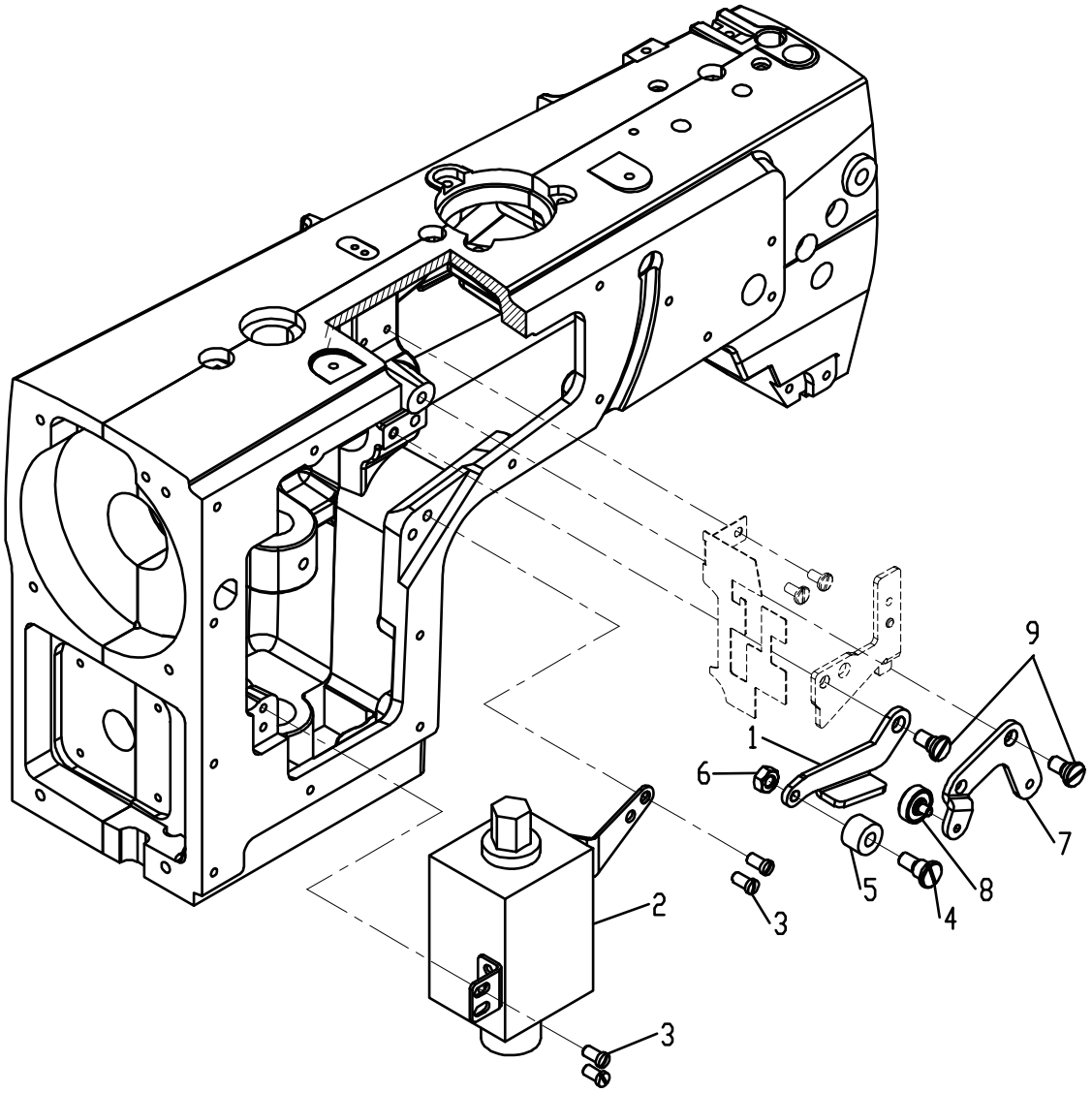

SIRUBA SEQUENCE LIST	Series	Parts Group	Subclass Remark	Page
	DL7200C	LU		3 / 3
				Date
				2020/12/28

序号 Ref.No.	新编号 new part No.	名称 Part name	Name of parts	数量 Qty	备注 Note
1	7200C10001	压板	Press Plate	1	
2	920015002	抬压脚电磁铁	foot lifter electromagnet	1	
3	S094762809	螺钉 SM3/16x28 L=9	Screw	4	
4	920015004	螺钉	Screw	1	
5	920015005	抬压脚后杠杆套	Lever sleeve for lifting presser foot	1	
6	920015006	螺母	Nut	1	
7	7200C10007	驱动杆	Driving Lever	1	
8	7200C10008	轴承	Bearing	1	
9	7200C10009	螺钉 SM15/64x28 L=12	Screw	2	

SiRUBA PARTS LIST	Series	Parts Group	Subclass Remark	Page
	DL7200C	LW		1 / 1
				Date
				2020/12/28

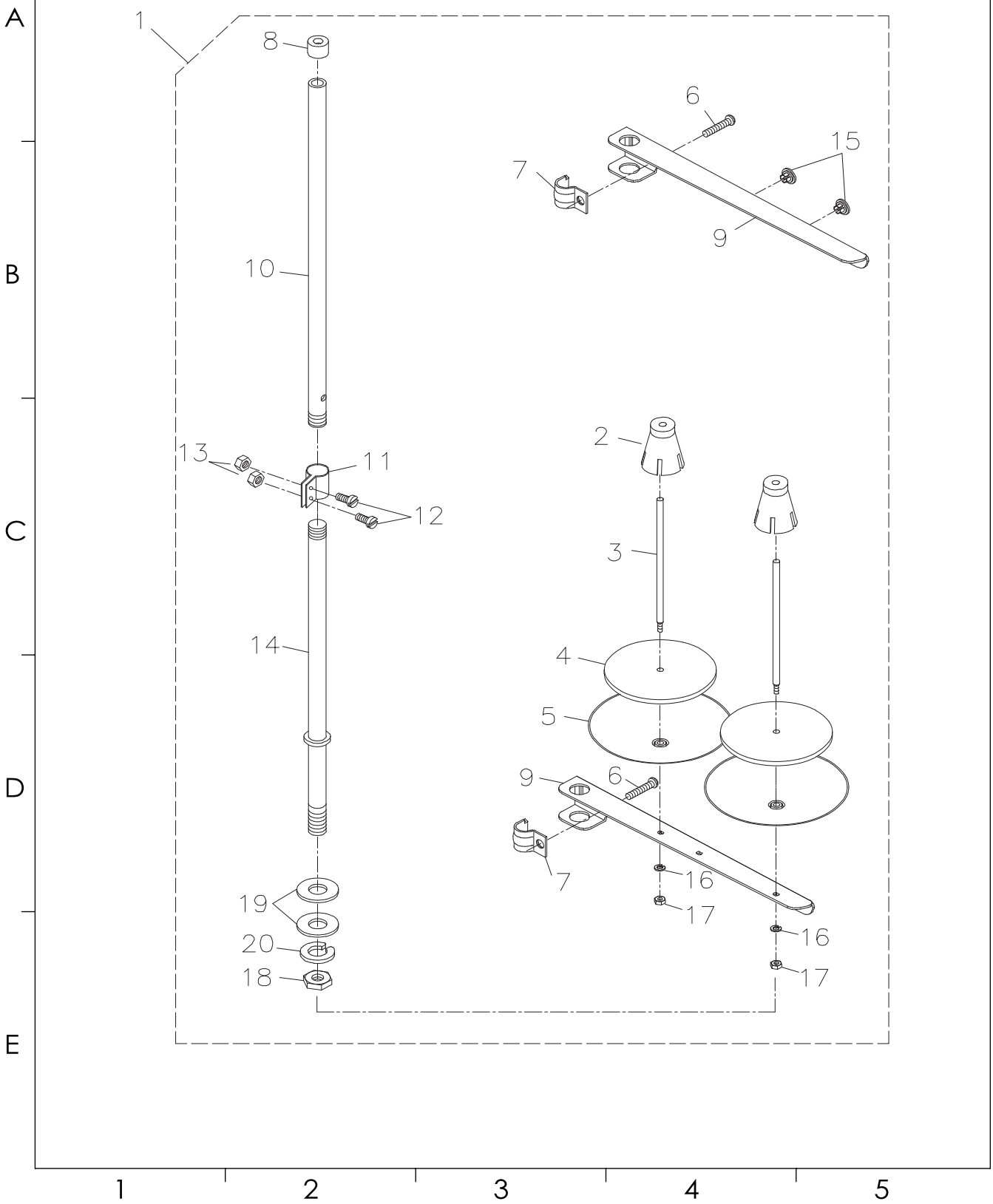

SIRUBA SEQUENCE LIST	Series	Parts Group	Subclass Remark	Page
	DL7200C	LW		1 / 1
				Date
				2020/12/28

序号 Ref.No.	新编号 new part No.	名 称 Part name	Name of parts	数量 Qty	备注 Note
1	991013001	过线架部件	Thread stand asm	1	
2	991013002	线团防松垫	Spool retainer	2	
3	991013003	线盘钉	Spool pin	2	
4	991013004	线盘轮垫	Spool rest cushion	2	
5	991013005	线盘	Spool rest	2	
6	M090601016	线架过线夹螺钉	Screw M6×16	2	
7	991013007	线架过线夹	Thread guide arm joint	2	
8	991013008	线架杆顶防护橡皮	Spool rest rod rubber cap	1	
9	991013009	线架过线杆	Spool rest arm	2	
10	991013010	线架杆上节	Spool rest rod upper	1	
11	991013011	接架杆接头	Spool rest rod joint	1	
12	M090500814	接架杆接头螺钉	Screw M5×14	2	
13	N210500805	接架杆接头螺母	Nut M5	2	
14	991013014	线架杆下节	Spool rest rod lower	1	
15	991013015	过线圈	Thread guide	2	
16	991013016	线盘钉弹簧垫	Spring washer	2	
17	991013017	线盘钉螺母	Nut M5	2	
18	991013018	线架杆紧固螺母	Nut M6×1.5	1	
19	991013019	线架杆紧固螺母垫圈	Washer 16×30×2.6	2	
20	991013020	紧固螺母弹簧垫圈	Spring washer	1	

SiRUBA PARTS LIST	Series	Parts Group	Subclass Remark	Page
	DL7200C	LY		1 / 1
				Date
				2020/12/28

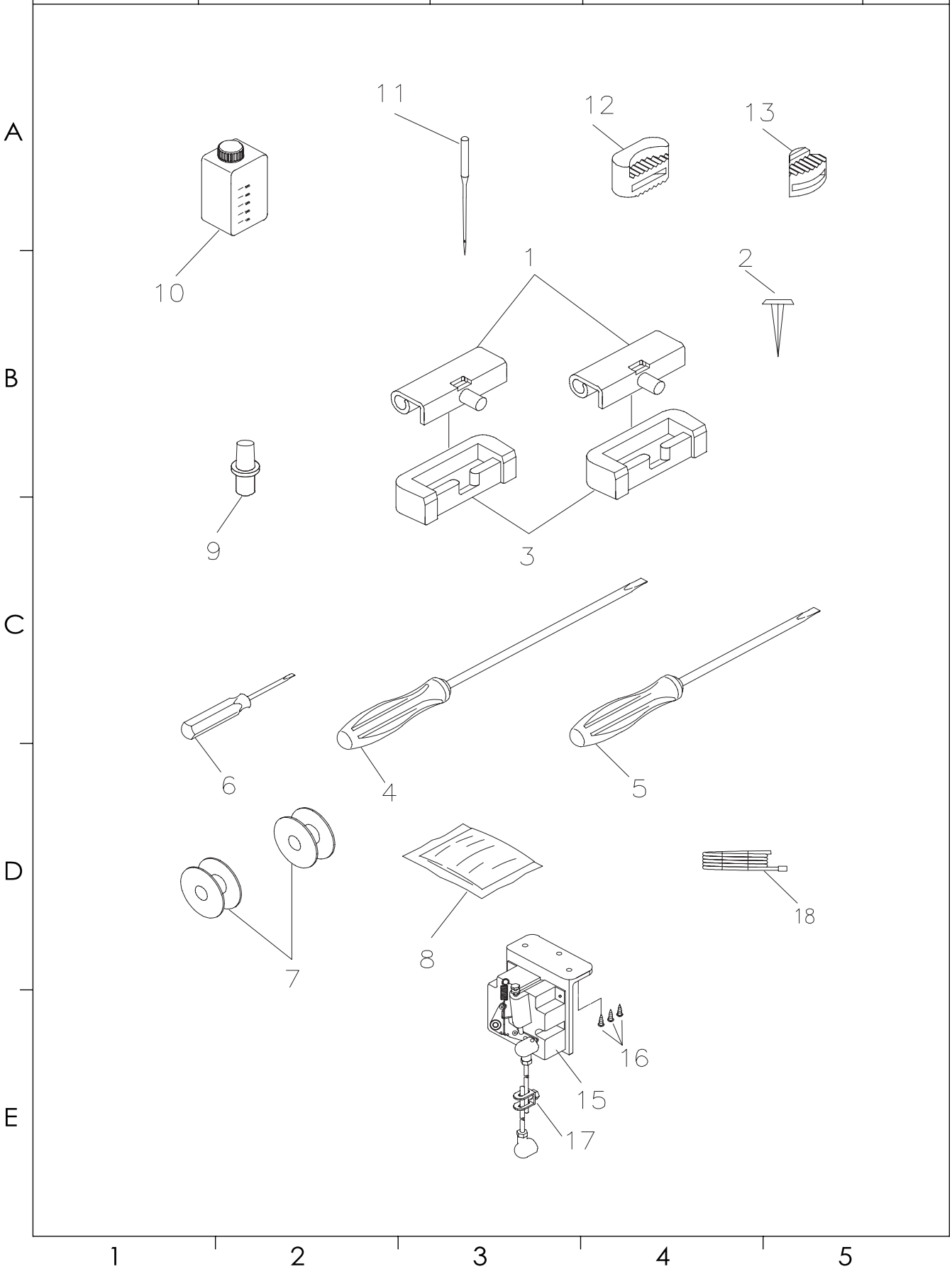

SIRUBA SEQUENCE LIST	Series	Parts Group	Subclass Remark	Page
	DL7200C	LY		1 / 1
				Date
				2021/03/22

序号 ef. No.	新编号 new part No.	名 称 Part name	Name of parts	数量 Qty	备注 Note
1	991014001	机头连接钩组件	Machine hinge plate asm.	2	
2	991014002	机头连接钩座钉	Nail	4	
3	991014003	机头连接钩座	Machine hinge plate	2	
4	991014004	螺丝刀（大）	Screw driver,large	1	
5	991014005	螺丝刀（中）	Screw driver.mendium	1	
6	991014006	螺丝刀（小）	Screw driver.small	1	
7	991003029	梭心	Bobbin	2	
8	991014008	机头罩	Machine head cover	1	
9	288011012	机头支柱	Machine head holder	1	
10	991014010	油箱部件	Oil reservoir asm.	1	
11	991014011	机针 DBx1 #14	Needle DBx1 #14	4	
11	991003011H-5	机针 DPx5 #20	Needle DPx5 #21	4	
12	991014012	防震垫(A)	quakeproof washer A	2	
13	991014013	防震垫(B)	quakeproof washer B	2	
15	990000002	控速器	speed controller	1	
16	991014018	控速器安装螺钉	speed controller screw	5	
17	990000001	控速器拉杆	speed controller pull rod	1	
18	990000003	电源线	Power cord	1	

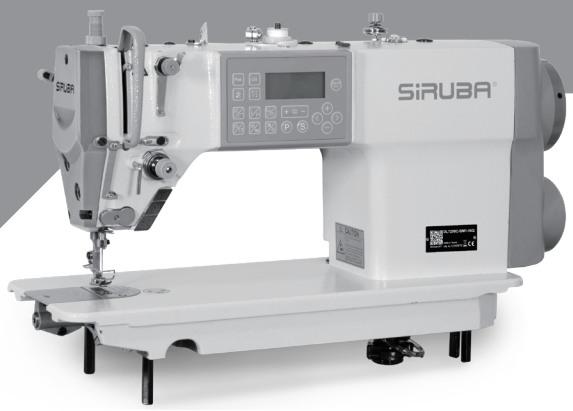

高林股份有限公司
KAULIN MFG. CO., LTD.

由於對產品的改良及更新 , 本產品使用說明書中與零件圖之產品及外觀的修改恕不事先通知 !
The specification and/or the equipment described in the instruction book and parts list are subject to change because of modification with out previous notice

BYL - 13S16.JUN.2022